BALLUFF

Balluff BVS HS-PC Industrial Corded Handheld Barcode Reader

Quick Guide

english

World Headquarters Germany
Balluff GmbH
Schurwaldstraße 9
73765 Neuhausen a.d.F
Service-Hotline +49 7158 173-370
service@balluff.de

Subsidaries
USA
Balluff Inc.
8125 Holton Drive
Florence,
Kentucky 41042-0937
Phone (859) 727-2200,
1-800-543-8390
applications@balluff.com

Produced by DATALOGIC S.r.l.

An electronic version of this document is downloadable from the Balluff website (www.Balluff.com).
If you visit our website and would like to make comments or suggestions about this or other Balluff publications, please let us know via the "Contact" page.

Disclaimer
This document contains operating instructions and technical documentation for BVS HS Handscanners by Balluff GmbH. All specifications and instructions in this document, especially the Safety Notes section, must be strictly observed. This operator's manual must be carefully stored so that it is always available. The information and illustrations in this operating manual were carefully checked to the best of our ability. Nevertheless, Balluff GmbH cannot assume any liability for the correctness and completeness of this information, since in spite of all due care errors and mistakes cannot be completely avoided. In particular this information and the illustrations do not constitute agreements as to condition according to § 434 of the German Civil Code or guarantees according to § 443 of the GCC.
The information in this manual is based on current knowledge and experience of Balluff GmbH.

No legally binding assurance of certain properties or suitability for a specific purpose can be derived from the information in this operating manual.

Trademarks
The product, goods, company and technology names are trademarks of the respective companies. In particular: Microsoft®, Windows®, Windows XP®, .NET FRAMEWORK ® and Windows 7® are registered trademarks of Microsoft Corporation ; QR Code (R) is a registered trademark of Denso Wave Incorporated. Balluff and Balluff Logo are registered trademarks of Balluff GmbH in many countries.It is the user's responsibility to observe any property rights and provisions.

Patents
This product is covered by one or more of the following patents:

Design patents: AU344427, AU344428, AU344429, EP001970237, TWD159476, TWD159477, TWD160254, TWD160255, USD682277, USD702238, ZL201230284676.X
Utility patents: EP0996284B1, EP0999514B1, EP1128315B1, EP1172756B1, EP1396811B1, EP1413971B1, EP1828957B1, JP4435343B2, US6478224, US6512218, US6513714, US6561427, US6808114, US6877664, US6997385, US7053954, US7234641, US7387246, US7721966, US8245926, US8561906, US8743263

All patents belong to a third party!

BALLUFF GMBH

1 END USER SOFTWARE LICENSE AGREEMENT (EULA)

FOR THE BVS HS-P Series

Notice to End User: There are two types of software covered by this END USER LICENSE AGREEMENT ("EULA"): (1) The Balluff Product you have acquired contains embedded software ("Embedded Software") which is integral to the Product's operation; and (2) Optional Application Software provided to you on an optional basis ("Application Software"). Embedded Software and Application Software are collectively referred to as "Software" and are subject to the terms and conditions contained in this EULA. Software is provided only for use with, and for authorized end users of, the Balluff BVS HS-P Series of hand held readers ("Product"). Portions of the Embedded Software include or operate with Open Source software or libraries ("Open Source"). Use of Open Source is subject to the Open Source licenses entitled "****_***_BVS_HS-PReaders_OpenSource.zip" available at the following website http://www.balluff.com.**

This EULA (End User Software License Agreement) ("EULA" or "Agreement") is a legally binding agreement governing the licensing of the Software and Documentation by Balluff GbmH. and its subsidiaries and affiliates ("Balluff") to the entity or person who has purchased or otherwise acquired a Balluff Product ("End User"). For purposes of this Agreement, any software that is not Embedded Software or Application Software is software associated with a separate end-user license agreement is licensed to you under the terms of that license agreement. Balluff and End User hereby agree as follows:

1. Definitions.

1.1 "Affiliate" means a business entity currently existing or later acquired that is controlled by, or is under common control with Balluff GmbH.

1.2 "Documentation" means materials such as user's guides, program reference guides, quick reference guides, manuals, or similar materials associated with or related to the Balluff Product, whether in printed, "online", or other form.

1.3 "Proprietary Information" means: (a) source code, object code, software, documentation, and any related internal design, system design, data base design, algorithms, technology, technical data or information, implementation techniques, and trade secrets related to the Software, (b) any other trade secrets marked appropriately or identified as proprietary or confidential, and (c) any information that End User, under the circumstances, should recognize as confidential. Proprietary Information does not include any information that the receiving party can establish was (1) in the public domain, (2) already in the receiving party's possession or rightfully known prior to receipt, (3) rightfully learned from a third party not in violation of any other's proprietary rights, or (4) independently developed without access to Proprietary Information.

1.4 "Balluff Product" means the Balluff BVS HS-P series scanner product, including all embedded Software in and all Documentation related to such product, which has been purchased or otherwise acquired by End User, whether obtained directly or indirectly from Balluff.

1.5 "Software" means any software or computer programs of Balluff or its third party licensors in machine readable form which is embedded in the Balluff Product, whether obtained directly or indirectly from Balluff, including any replacement, update, upgrade, enhancement or modification.

2. Scope Of License Granted.

2.1 Balluff grants to End User a non-exclusive, non-transferable, perpetual license to use the Software, solely on the Balluff Product in which it is embedded ("designated Balluff Product"), in machine-readable form only, solely for End User's internal business purposes. This Agreement does not convey ownership of the Software to End User. Title to the Software shall be and remain with Balluff or the third party from whom Balluff has obtained a licensed right. As used in this Agreement, the term "purchase" or its equivalents when applied to the Software shall mean "acquire under license." End User is not entitled to receipt or use of the source code to any Software.

2.2 End User shall not copy, modify, decompile, disassemble, reverse engineer, or otherwise reproduce or remanufacture the Software, whether modified or unmodified, nor sell, assign, sublicense, distribute, lend, rent, give, or otherwise transfer the Software to any other person or organization, for purposes other than as expressly provided in this Agreement, without Balluff's prior written consent.

3. Transfers, Support.

3.1 Any copying, installing, reproduction, remanufacture, reverse engineering, electronic transfer, or other use of the Software on other than the designated Balluff Product will be a material breach of this Agreement. However, Balluff may elect not to terminate this Agreement or the granted licenses, but instead may elect to notify End User that End User is deemed to have ordered and accepted a license for each breaching use. End User shall pay Balluff the applicable list price for such licenses as of the date of such breach.

3.2 End User may obtain support for Software from Balluff at Balluff's standard support fees and under Balluff's standard support terms and conditions in effect at the time the support is requested.

3.3 End User shall make at its own cost and liability a back up copy of any data processed and/or run through the Software.

4. Intellectual Property.

End User acknowledges that the Software constitutes valuable trade secrets of Balluff or Balluff's third party licensors and that the Software is protected by intellectual property laws and treaties. The license set forth in this Agreement does not transfer to End User any ownership of Balluff's or its third party licensors' copyrights, patents, trademarks, service marks, trade secrets, or other intellectual property rights and End User shall have no right to commence any legal actions to obtain such rights. End User shall not remove, modify, or take any other action that would obscure any copyright, trademark, patent marking, or other intellectual property notices contained in or on the Balluff Product.

5. Proprietary Information.

5.1 End User acknowledges that Proprietary Information is the confidential, proprietary, and trade secret property of Balluff and Balluff's third party licensors and End User acquires no right or interest in any Proprietary Information.

5.2 End User shall not disclose, provide, or otherwise make available the Proprietary Information of Balluff or its third party licensors to any person other than End User's authorized employees or agents who are under confidentiality agreement, and End User shall not use the Proprietary Information other than in conjunction with use of the Balluff Product exclusively for End User's internal business purposes. End User shall take steps to protect the Proprietary Information no less securely than if it were End User's own intellectual property.

5.3 The provisions of this Proprietary Information Section shall survive and continue for five (5) years after the termination of this Agreement.

6. Limited Warranty.

6.1 Balluff warrants that, under normal use and operation, the Balluff Product will conform substantially to the applicable Documentation for the period specified in the Documentation. During this period, for all reproducible non- conformities for which Balluff has been given written notice, Balluff will use commercially reasonable efforts to remedy nonconformities verified by Balluff. End User agrees to supply Balluff with all reasonably requested information and assistance necessary to help Balluff in remedying such nonconformities. For all defects reported to Balluff within the warranty period, Balluff's liability is limited to providing End User with one copy of corrections or responding to End User's problem reports according to Balluff's standard assistance practices. Balluff does not warrant that the product will meet End User's requirements or that use of the product will be uninterrupted or error free, or that Balluff's remedial efforts will correct any nonconformance. This limited warranty does not cover any product that have been subjected to damage or abuse, whether intentionally, accidentally, or by neglect, or to unauthorized repair or unauthorized installation, and shall be void if End User modifies the product, uses the product in any manner other than as established in the Documentation, or if End User breaches any of the provisions of this Agreement.

6.2 EXCEPT AS PROVIDED IN THIS AGREEMENT, THE BALLUFF PRODUCT IS PROVIDED "AS IS" AND BALLUFF MAKES NO WARRANTIES OF ANY KIND, EXPRESS OR IMPLIED, WRITTEN OR ORAL, WITH RESPECT TO THE PRODUCT, AND SPECIFICALLY DISCLAIMS THE IMPLIED WARRANTIES OF MERCHANT- ABILITY AND FITNESS FOR A PARTICULAR PURPOSE.

7. Infringement.

7.1 Balluff will defend End User against any claim in a lawsuit that the Balluff Product furnished hereunder infringe a United States patent or copyright of a third party and Balluff will pay any damages finally awarded against End User by a court of competent jurisdiction that are attributable to such claim or will pay End User's part of any settlement that is attributable to such claim, provided, that 1) End User notifies Balluff promptly in writing of the claim, 2) Balluff controls the defense or settlement of the claim, and 3) End User cooperates fully with Balluff in such defense or settlement. All notices of a claim should be sent to Balluff GbmH Schurwaldstraße 9, D-73765 Neuhausen/Fildern, Germany. In the defense or settlement of any such claim, Balluff may, at its option, 1) procure for End User the right to continue using the Balluff Product, 2) modify the Balluff Product so that it becomes non-infringing, 3) replace the Balluff Product with an equivalent product not subject to such claim, or 4) provide End User an opportunity to return the Balluff Product and receive a refund of the purchase price paid, less a reasonable allowance for use.

7.2 Balluff shall have no liability to End User for claims of infringement based upon 1) the use of any Balluff Product in combination with any product which Balluff has not either furnished or authorized for use with such Product 2) the use of any Balluff Product designed, manufactured, or modified to the specifications of End User, or 3) End User's modification of the Balluff Product without written authorization from Balluff.

7.3 THE FOREGOING STATES BALLUFF'S COMPLETE AND ENTIRE OBLIGATION CONCERNING CLAIMS OF PATENT, COPYRIGHT, OR OTHER INTELLECTUAL PROPERTY INFRINGEMENT, CANCELS AND SUPERCEDES ANY PRIOR AGREE- MENTS, WHETHER ORAL OR WRITTEN, BETWEEN THE PARTIES CONCERNING SUCH CLAIMS, AND WILL NOT BE MODIFIED OR AMENDED BY ANY PAST, CON- TEMPORANEOUS, OR FUTURE AGREEMENTS OR DEALINGS BETWEEN THE PARTIES, WHETHER ORAL OR WRITTEN, EXCEPT AS SET FORTH IN A FUTURE WRITING SIGNED BY BOTH PARTIES.

8. Limitation Of Liability.

IN NO EVENT SHALL BALLUFF'S LIABILITY FOR DAMAGES, IF ANY, WHETHER BASED UPON CONTRACT, TORT (INCLUDING NEGLIGENCE), PRODUCT LIABILITY, STRICT LIABILITY, WARRANTY, OR ANY OTHER BASIS, WILL INCLUDE LOST PROFITS, LOST DATA, INTERRUPTION OF BUSINESS OR SERVICE, OR FOR ANY OTHER SPECIAL, PUNITIVE, EXEMPLARY, OR OTHER SIMILAR DAMAGES, EVEN IF BALLUFF HAS BEEN ADVISED OF THE POSSIBILITY OF SUCH DAMAGES. BALLUFF SHALL BE LIABLE FOR THOSE DAMAGES WHICH OCCURRED DIRECTLY FROM ANY BREACH OF CONSTITUIONAL OBLIGATIONS OF THIS AGREEMENT AND WHICH HAVE CAUSED ACTUAL FINANCIAL LOSS AS OF THEIR OCCURRENCE.

9. Government Restricted Rights; International Use.

9.1 Use, duplication, or disclosure of the Software by the U.S. Government is subject to the restrictions for computer software developed at private expense as set forth in the U.S. Federal Acquisition Regulations at FAR 52.227-14(g), or 52.227-19 or in the Rights in Technical Data and Computer Software clause at DFARS 252.227-7013(c)(1)(ii), whichever is applicable.

9.2 End User must comply with the applicable local laws of the country in which the Balluff Product is used, with U.S. export control laws, and with this Agreement. The provisions of the "United Nations Convention on International Sale of Goods" shall not apply to this Agreement.

10. Termination.

10.1 Either party may terminate this Agreement or any license granted under this Agreement at any time upon written notice if the other party breaches any provision of this Agreement.

10.2 Upon termination of this Agreement, End User immediately shall cease using any nonembedded software and shall return to Balluff or destroy all nonembedded software covered by this Agreement, and shall furnish Balluff with a certificate of compliance with this provision signed by an officer orauthorized representative of End User. For embedded software, End User agrees to sign a waiver prepared by Balluff concerning further use of the embedded Software. End User's resumed or continued use of the embedded Software after termination shall constitute End User's agreement to be bound by the terms and conditions of this Agreement for such use.

11. General Provisions.

11.1 Entire Agreement; Amendment. This document contains the entire agreement between the parties relating to the licensing of the Software and supersedes all prior or contemporaneous agreements, written or oral, between the parties concerning the licensing of the Software. This Agreement may not be changed, amended, or modified except by written document signed by Balluff..

11.2 Notice. All notices required or authorized under this Agreement shall be given in writing, and shall be effective when received, with evidence of receipt. Notices to Balluff shall be sent to the attention of Contract Administration, Balluff GmbH Schurwaldstraße 9, D-73765 Neuhausen/Fildern, Germany, or such other address as may be specified by Balluff in writing.

11.3 Waiver. A party's failure to enforce any of the terms and conditions of this Agreement shall not prevent the party's later enforcement of such terms and conditions

11.4 It is agreed that (a) place of jurisdiction for legal actions falling within the jurisdiction as regards the subject matter of the Amtsgericht (local courts) shall be the Amtsgericht Stuttgart, Germany and (b) place of jurisdiction for legal actions falling within the jurisdiction as regards the subject matter of the Landgericht (regional courts) shall be the Landgericht Stuttgart, Germany.

11.5 German law shall apply exclusively without giving effect to its conflict of laws principles.

11.6 In addition to these EULA, the General Terms and Conditions of Balluff shall apply. In the event that individual provisions of the EULA contradict any provision of General Terms and Conditions, then, the EULA shall prevail. Without prejudice of the foregoing, should a clause of the EULA contradict the applicable law, then, to the extent the General Terms and Conditions have most favorable provision for Balluff in this respect, then the Parties shall refer to the General Terms and Conditions of Balluff.

- END -

Software Product Policy

Balluff reserves the right to ship its products with the latest version of software/firmware available. This provides our customers with the very latest in Balluff software technology.

2 Description

The Balluff BVS HS-PC-Series hand held readers are a featurerich and rugged area imager reader. It is offered in several different models to better fit the different needs of each customer.

The table below shows the unique features of each model:

Model P/N	Optical feature
BVS HS-PC-HDW-MA-02	Autofocus optic, High, standard and low density codes, wide angle
BVS HS-PC-DPW-MA-01	High Density optic, high and medium density codes, DPM (laser, ink jet and dot peen)

2.1 General Features

Omni-directional Operating	To read a symbol or capture an image, you simply aim the reader and pull the trigger. Since the Balluff BVS HS-PC-Series hand held is a powerful omni-directional reader, the orientation of the symbol is not important.
Decoding	Thanks to powerful algorithms, Balluff BVS HS-PC-Series hand held reliably decodes all major 1D (linear) barcodes, 2D stacked codes (such as PDF417), 2D matrix symbols (such as DataMatrix), postal codes (such as POSTNET, PLANET). The data stream — acquired from decoding a symbol — is rapidly sent to the host. The reader is immediately available to read another symbol.
Formatting and Concatenating	The string of a decoded code may be processed according to either a simple or advanced data formatting and be concatenated.
Imaging	The Balluff BVS HS-PC-Series hand held can also function as a camera by capturing entire images or image portions of labels, signatures, and other items.
Autoscanning	An autoscan command causes the reader to scan continuously and to monitor the central zone of its reading area.
Flash Memory	Flash technology allows you to upgrade the Balluff BVS HS-PC-Series hand held reader as new symbologies are supported or as improved decoding algorithms become available.

3 Setting Up the Reader

Follow the steps below to connect and get your reader up and communicating with its host.

1 Connect the Cable to the reader and the Host, shown on page 9.

2 Configure the Interface (see page 11).

3 Configure the Reader starting on page 19 (optional, depends on settings needed)

Connect the BVS HS-PC readers hand held by plugging directly into the host device as shown. The power can also be supplied through an external power supply via the Interface Cable supplied with a power jack.

3.1 Connecting the Cable

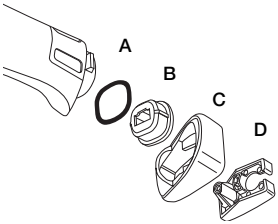

A. Rubber gasket
B. Cable Holder
C. Cover
D. Connector Holder

1 Slip the cable through the Cover.

2 Push the Rubber Gasket onto the Cable Holder.

3 Push the Cable Holder and gasket into the handle. Ensure that the “Front” marking on the Cable Holder is facing out, with the arrow pointing towards the front of the scanner.

4 Insert the end of the cable into the socket of the Cable Holder.

5 Push the Cover along the cable towards the reader, and hook it over the yellow “tooth” on the back of the handle.

6 Insert the cable through the Connector Holder, and push it up into the Cover.

7 Insert and tighten the screw to affix the cable assembly to the reader handle.

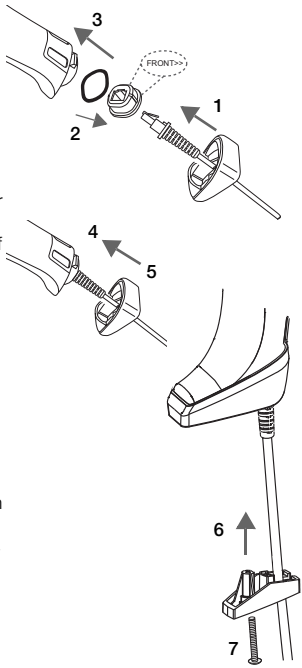

4 Using the BVS HS-PC reader

The BVS HS-PC reader normally functions by capturing and decoding barcodes. The reader is equipped with an internal motion-sensing function which activates the aiming system on device motion. The intelligent aiming system indicates the field of view which should be positioned over the barcode:

Aiming System

Model P/N	Aimer pattern
BVS HS-PC-DPW-MA-01	
BVS HS-PC-HDW-MA-02	

The field of view indicated by the aiming system will be smaller when the reader is closer to the barcode and larger when it is farther from the code. Symbologies with smaller bars or elements (mil size) should be read closer to the unit. Symbologies with larger bars or elements (mil size) should be read farther from the unit.

If the entire barcode is within the aiming field, you will get a good read. Successful reading is signaled by an audible tone plus a good-read green spot LED indicator which is backprojected at the read code.

Reference the BVS HS-P series operation manual (OPM) for more information about this feature and other programmable settings.

5 Selecting the Interface Type

Upon completing the physical connection between the reader and its host, proceed directly to Interface Selection below for information and programming for the interface type the reader is connected to (for example: RS-232, USB, etc.) and scan the appropriate barcode to select your system's correct interface type.

5.1 Interface Selection

All models are multi-interface and support RS-232 and USB.

Information and programming options for each interface type are provided in this section. For defaults and addi- tional information associated with each interface, proceed to the corresponding chapter in the BVS HS-P series operation manual (OPM).

5.1.1 Configuring the Interface

Scan the appropriate programming barcode to selects the interface type for your system.

NOTE

Unlike some other programming features and options, interface selections require that you scan only one programming barcode label. DO NOT scan an ENTER/EXIT barcode prior to scanning an interface selection barcode.
Some interfaces require the scanner to start in the disabled state when powered up. If additional scanner configuration is desired while in this state, pull the trigger and hold for 5 seconds. The scanner will change to a state that allows programming with barcodes.

5 Selecting the Interface Type

RS-232
RS-232 standard interface RS-232 RS-232 Wincor-Nixdorf RS232-WN
USB
USB Com to simulate RS-232 standard interface USB-COM[a]
USB-OEM USB-OEM a. Download the correct USB Com driver from www.Balluff.com

5 Selecting the Interface Type

USB (continued)
USB Keyboard with standard key encoding USB-KBD
USB Keyboard with alternate key encoding USB-KBD-ALT USB Keyboard for Apple computers USB-KBD-APPLE

5.1.2 Scancode Tables

Reference the BVS HS-PC-Series OPM for information about control character emulation for keyboard interfaces.

5.1.3 Country Mode

This feature specifies the country/language supported by the keyboard. This option is usable only with USB-KBD interface without the "Alternate Key" mode.

COUNTRY MODE
ENTER/EXIT PROGRAMMING MODE
Country Mode = U.S.
Country Mode = Belgium
Country Mode = Britain
Country Mode = Croatia*

* Supports only the interfaces listed in the Country Mode feature description

5 Selecting the Interface Type

COUNTRY MODE (continued)

Country Mode = Czech*

Country Mode = Denmark*

Country Mode = France

Country Mode = French Canadian*

Country Mode = Germany

Country Mode = Hungary*

* Supports only the interfaces listed in the Country Mode feature description

COUNTRY MODE (continued)

Country Mode = Italy

Country Mode = Japanese 106-key*

Country Mode = Lithuanian*

Country Mode = Norway*

Country Mode = Poland*

Country Mode = Portugal*

* Supports only the interfaces listed in the Country Mode feature description

5 Selecting the Interface Type

COUNTRY MODE (continued)

Country Mode = Romania*

Country Mode = Spain

Country Mode = Sweden

Country Mode = Slovakia*

Country Mode = Switzerland*

* Supports only the interfaces listed in the Country Mode feature description

5.1.4 Caps Lock State

This option specifies the format in which the reader sends character data. This applies to keyboard wedge interfaces. This does not apply when an alternate key encoding keyboard is selected.

ENTER/EXIT PROGRAMMING MODE

Caps Lock State = Caps Lock OFF

Caps Lock State = Caps Lock ON

Caps Lock State = AUTO Caps Lock Enable

6 Programming

The reader is factory-configured with a set of standard default features. After scanning the interface barcode from the Interfaces section, select other options and customize your reader through use of the programming barcodes available in the BVS HS-PC reader. Check the corresponding features section for your interface, and also the Data Editing and Symbologies chapters of the OPM.

6.1 Using Programming Barcodes

This manual contains barcodes which allow you to reconfigure your reader. Some programming barcode labels, Programming like the "Reset Default Settings" on page 15, require only the scan of that single label to enact the change.

Other barcodes require the reader to be placed in Programming Mode prior to scanning them. Scan an ENTER/EXIT barcode once to enter Programming Mode; scan the desired parameter settings; scan the ENTER/EXIT barcode again to accept your changes, which exits Programming Mode and returns the reader to normal operation.

6.2 Configure Other Settings

Additional programming barcodes are available in the OPM to allow for customizing programming features. If your installation requires different programming than the standard factory default settings, refer to the OPM.

6.3 Resetting Product Defaults

If you aren't sure what programming options are in your reader, or you've changed some options and want your custom factory settings restored, scan the barcode below to reset the reader to its initial configuration. Reference the OPM for other options, and a listing of standard factory settings.

NOTE

Factory defaults are based on the interface type. Be sure your reader is configured for the correct interface before scanning this label. See "Selecting the Interface Type" on page 11 for more information.

Reset Default Settings

7 Reading Parameters

Move the reader toward the target and center the aiming pattern and illumination system to capture and decode the image. See "Using the BVS HS-PC reader" on page 10 for more information.

The aiming system will briefly switch off after the acquisition time, and if no code is decoded will switch on again before the next acquisition. The illuminator will remain on until the symbol is decoded.

As you read code symbols, adjust the distance at which you are holding the reader.

7.1 Good Read Green Spot Duration

Successful reading can be signaled by a good read green spot. Use the barcodes that follow to specify the duration of the good read pointer beam after a good read.

ENTER/EXIT PROGRAMMING MODE

Disabled

¨ Short (300 ms)

Medium (500 ms)

Long (800 ms)

8 Operating Modes

8.1 Scan Mode

The imager can be set to operate in one of several scanning modes. See the OPM for more information and settings for any of the options:

Trigger Single (Default) — This mode is associated with typical handheld reader operation. Motion Sense is active and if the scanner detects motion the aiming pattern is turned on. When the trigger is pulled, illumination is turned on and the scanner attempts to read a label. Scanning is activated until one of the following occurs:

- the programmable “maximum scan on time”[1] has elapsed
- a label has been read
- the trigger is released

Trigger Pulse Multiple — Scanning begins when the trigger is pulled and continues after the trigger is released, until the trigger is pulled again or until the programmable “maximum scan on time”[1] has elapsed. Reading a label does not disable scanning. Double Read Timeout[1] prevents undesired multiple reads while in this mode.

Trigger Hold Multiple — When the trigger is pulled, scanning starts and the product scans until the trigger is released or “maximum scan on time”[1] has elapsed. Reading a label does not disable scanning. Double Read Timeout[1] prevents undesired multiple reads in this mode.

Always On — The illuminator is always ON and the reader is always ready for code reading. Double Read Timeout[1] prevents undesired multiple reads.

Flashing — The reader illuminator flashes on and off regardless of the trigger status. Code reading takes place only during the Flash On[2] time. Double Read Timeout[1] prevents undesired multiple reads.

Stand Mode — The scanner looks for changes within its field-of-view. The Aiming Pattern is always on to show the optimum reading area. If a predefined amount of movement is detected, the red illumination switches on. Scanning continues until a label is read or "maximum scan on time" is reached.

1. See the operation manual (OPM) for these and other programmable features
2. Controlled by Flash On Time and Flash Off Time. Use the OPM to program these options.

Scan Mode (continued)

ENTER/EXIT PROGRAMMING MODE

¨ Scan Mode = Trigger Single

Scan Mode = Trigger Pulse Multiple

Scan Mode = Trigger Hold Multiple

Scan Mode = Flashing

Scan Mode = Always On

Scan Mode = Stand Mode

8.2 Motion Aiming Control

This feature configures the ability of the scanner to Enable/Disable the Aiming system when motion is detected. Scan the Enter/Exit Programming barcode above, then either of the barcodes below.

¨ Motion Aiming Control = Enable

Motion Aiming Control = Disable

8 Operating Modes

8.3 Pick Mode

Specifies the ability of the reader to decode labels only when they are close to the center of the aiming pattern. Pick Mode is a Decoding and Transmission process where barcodes that are not within the configurable distance from the center of the aiming pattern are not acknowledged or transmitted to the host. It is active only while the scanner is in Trigger Single mode. If the scanner switches to a different Read Mode, Pick Mode is automatically disabled.

NOTE

This feature is not compatible with Multiple Labels Reading in a Volume. See the OPM for more information.

ENTER/EXIT PROGRAMMING MODE

¨ Pick Mode = Disable

Pick Mode = Enable

8.4 Multiple Label Reading

The reader offers a number of options for multiple label reading. See the OPM or software configuration tool for descriptions of these features and programming labels.

9 Technical Specifications

The following table contains Physical and Performance Characteristics, User Environment and Regulatory information.

Item	**Description**	
Physical Characteristics		
Dimensions	Height: 212 mm Length: 110 mm Width: 74 mm	
Weight (without cable)	330 gr (without cable)	
Electrical Characteristics		
Voltage & Current	**BVS HS-PC-HDW-MA-02**	**BVS HS-PC-DPW-MA-01**
Input Voltage	5 VDC +/- 5%	5 VDC +/-5%
Input Current		
Operating (typical):	335mA	350mA
Operating (max):	475mA	480mA
Idle/Standby (typical)	180mA	120mA
Performance Characteristics		
Light Source	LED, White	
Roll (Tilt) Tolerance	± 180°	
Pitch Tolerance	± 40°	
Skew (Yaw) Tolerance	± 40°	
Print Contrast Minimum	15% minimum reflectance	
Resolution	1D 2.5 mil 2D 4 mil	

9 Technical Specifications

Depth of Field (Typical)[a]		
Symbology	**BVS HS-PB-HDW-MZ-01**	**BVS HS-PB-DPW-MZ-01**
Code 39	2.5 mils: 2-6 cm 20 mils: 3-70 cm 40 mils: 3-110 cm	2 mils 2.8-6.3 cm 2,5 mils 2.5-7.8 cm 5 mils 1.2-9.0 cm
EAN 13	13 mils: 3-60 cm	13 mils: 2,5-16,0 cm
PDF-417	10 mils: 2-30cm	5 mils: 1.2-9.0 cm 10 mils: 1.0-12.5 cm
DataMatrix	4 mil: 2-6 cm 10 mil: 2-20 cm	4mil: 2.6-5.2 cm 5mil: 2.2-7.2 cm 10mil: 2.0-10.5 cm

a. All labels grade A,300 lux ambient light, 20°C, label inclination 10°
The following specs represent standard barcodes that are traditionally printed black on white on paper labels. Reading distances for DPM may vary depending from the printing technology , the code type and the surface material the DPM is used on

Decode Capability	
1D Barcodes GS1 Databar linear codes, UPC/EAN (A,E,13,8), UPC/EAN with P2/P5 Addons, UPC/EAN Coupons, ISBN, Code128, EAN128, ISBT128, Code39, Code39 Full ASCII, Code39 CIP, Code 32, Codabar, Interleaved 2 of 5, IATA, Industrial 2 of 5, Standard 2 of 5, Code11, MSI, Plessey, Code 93, Follet 2/5	
2D / Stacked Codes DataMatrix, MaxiCode and QR Codes(QR, Micro QR and Multiple QR codes), Aztec - Postal codes including: Australian Post, China Post, Japanese Post, KIX Post, Planet Code, Postnet, Royal Mail Code(RM45CC), IMB - stacked codes including EAN/JAN Composites; GS1 Databar Composites, GS1 Databar Expanded Stacked; GS1 DataBar Stacked; GS1 DataBar Stacked Omnidirectional; MacroPDF; Micro PDF417; PDF417; UPC A/E Composites, French CIP13, Grid Matrix (Chinese) code	
Interfaces Supported	RS-232 and USB. See page 11 for a listing of available interface options.
DIRECT PART MARKING (DPM) CAPABILITY: BVS HS-PC-DPW:	BVS HS-PC-DPW: Codes are generally readable when marked by laser or chemical etching or ink jet printed; Data Matrix codes are also readable when marked by dot peening on flat materials. Any codes needs to be tested for reliable reading. BVS HS-PC-HDW: NONE

9 Technical Specifications

User Environment	
Operating Temperature	-20° - +50° C
Storage Temperature	-40° to 70° C
Humidity	0 to 95% non-condensing
Drop Specifications	Reader withstands >50 times 2 m drops to concrete
Ambient Light Immunity	100,000 Lux
Contaminants: Spray/ rain, Dust/particulates	IP65
ESD Level	20 KV
Beeper/Speaker	>= 80 dB @ 10 cm
Regulatory	
Electrical Safety	UL 60950, CSA C22.2 No. 60950, IEC 60950
EMI/RFI	North America (FCC) : Part 15 Class B; Canada (IC) : ICES-003 Class B; Russia (EAC); European Union EMC Directive; VCCI-Japan; Korean KCC; Taiwan EMC (BSMI); Australia (ACMA); Mexico (NOM Nyce)
Laser Class Safety	IEC Class 2 Radiation 1 mW Avg., Emitted wavelength 650 nm, 12ms pulse, Beam Divergence 8.4 deg x 8.1 deg (“plus” pattern)
LED Classification	IEC 62471 Extempt group

CAUTION

Do not look directly into the light source – there is a risk of glare and irritation

10 LED and Beeper Indications

The reader's beeper sounds and its LED illuminates to indicate various functions or errors on the reader. An optional "Green Spot" also performs useful functions. The following tables list these indications. One exception to the behaviors listed in the tables is that the reader's functions are programmable, and so may or may not be turned on. For example, certain indications such as the power-up beep can be disabled using programming barcode labels.

Indicator	Description	LED	Beeper
Power-up Beep	The reader is in the process of powering-up.	N/A	Reader beeps four times at highest frequency and volume upon power-up.
Good Read Beep	A label has been successfully scanned by the reader.	LED behavior for this indication is configurable via the feature "Good Read: When to Indicate" (see the OPM for information.)	The reader will beep once at current frequency, volume, mono/bitonal setting and duration upon a successful label scan.
ROM Failure	There is an error in the reader's software/programming	Flashes	Reader sounds one error beep at highest volume.
Limited Scanning Label Read	Indicates that a host connection is not established.	N/A	Reader 'chirps' six times at the highest frequency and current volume.
Reader Active Mode	The reader is active and ready to scan.	The LED is lit steadily[a]	N/A
Reader Disabled	The reader has been disabled by the host.	The LED blinks continuously	N/A
Green Spot[a] flashes momentarily	Upon successful read of a label, the software shall turn the green spot on for the time specified by the configured value.	N/A	N/A
Image Capture	When ready to capture image	Blue light flashes 2 times when updating	N/A

[a] Except when in sleep mode or when a Good Read LED Duration other than 00 is selected

10 LED and Beeper Indications

Programming Mode - The following indications ONLY occur when the reader is in Programming Mode.

INDICATION	DESCRIPTION	LED	BEEPER
Label Programming Mode Entry	A valid programming label has been scanned.	LED blinks continuously	Reader sounds four low frequency beeps.
Label Programming Mode Rejection of Label	A label has been rejected.	N/A	Reader sounds three times at lowest frequency and current volume.
Label Programming Mode Acceptance of Partial Label	In cases where multiple labels must be scanned to program one feature, this indication acknowledges each portion as it is successfully scanned.	N/A	Reader sounds one short beep at highest frequency and current volume.
Label Programming Mode Acceptance of Programming	Configuration option(s) have been successfully programmed via labels and the reader has exited Programming Mode.	N/A	Reader sounds one high frequency beep and 4 low frequency beeps followed by reset beeps.
Label Programming Mode Cancel Item Entry	Cancel label has been scanned.	N/A	Reader sounds two times at low frequency and current volume.

11 Error Codes

Upon startup, if the reader sounds a long tone, this means the reader has not passed its automatic Selftest and has entered FRU (Field Replaceable Unit) isolation mode. If the reader is reset, the sequence will be repeated. Press and release the trigger to hear the FRU indication code.

The following table describes the LED flashes/beep codes associated with an error found.

Number of LED Flashes/ Beeps	Error	Corrective Action
1	Configuration	Contact Helpdesk for assistance
2	Interface PCB	
6	Digital PCB	
11	Imager	

12 Cleaning

Exterior surfaces and scan windows exposed to spills, smudges or debris require periodic cleaning to ensure best performance during scanning.

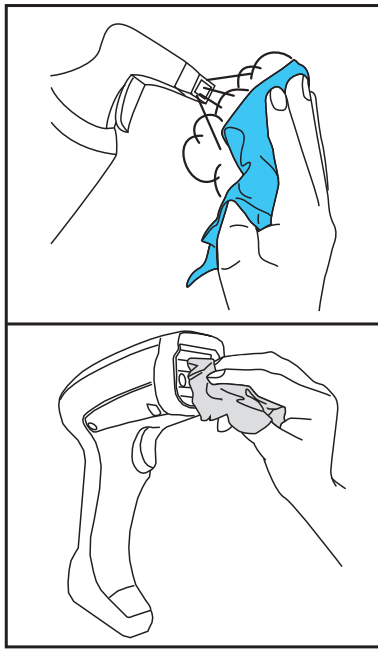

Use a soft, dry cloth to clean the product. If the product is very soiled, clean it with a soft cloth moistened with a diluted non-aggressive cleaning solution or diluted ethyl alcohol.

CAUTION

Do not use abrasive or aggressive cleansing agents or abrasive pads to clean scan windows or plastics.
Do not spray or pour liquids directly onto the unit.

13 Regulatory Addendum

850012714 Rev. A June 2015

13 Regulatory Addendum

Datalogic ADC, Inc.
959 Terry Street
Eugene, OR 97402 USA
Telephone: (541) 683-5700
Fax: (541) 345-7140

Disclaimer

Datalogic has taken reasonable measures to provide information in this manual that is complete and accurate, however, Datalogic reserves the right to change any specification at any time without prior notice.

Datalogic and the Datalogic logo are registered trademarks of Datalogic S.p.A. in many countries, including the U.S.A. and the E.U. All other brand and product names may be trademarks of their respective owners.

Patents

See www.patents.datalogic.com for patent list.

This product is covered by one or more of the following patents:

Design patents: AU344427, AU344428, AU344429, EP001970237, TWD159476, TWD159477, TWD160254, TWD160255, USD682277, USD702238, ZL201230284676.X

Utility patents: EP0996284B1, EP0999514B1, EP1128315B1, EP1172756B1, EP1396811B1, EP1413971B1, EP1828957B1, JP4435343B2, US6478224, US6512218, US6513714, US6561427, US6808114, US6877664, US6997385, US7053954, US7234641, US7387246, US7721966, US8245926, US8561906, US8743263.

13 Regulatory Addendum

13.1 Regulatory Information

All models are designed to be compliant with rules and regulations in locations they are sold and will be labeled as required.

Any changes or modifications to equipment, not expressly approved by Datalogic or Balluff could void the user's authority to operate the equipment.

Statement of Agency Compliance

This device complies with part 15 of the FCC Rules. Operation is subject to the following two conditions: (1) this device may not cause harmful interference, and (2) this device must accept any interference received, including interference that may cause undesired operation.

FCC Class B Compliance Statement

The user is cautioned that changes or modifications not expressly approved by the part responsible for compliance could void the user’s authority to operate the equipment.

This equipment has been tested and found to comply with the limits for a Class B digital device pursuant to part 15 of the FCC Rules. These limits are designed to provide reasonable protection against harmful interference in a residential installation. This equipment generates, uses, and can radiate radio frequency energy and, if not installed and used in accordance with the instructions, may cause harmful interference to radio communications. However, there is no guarantee that interference will not occur in a particular installation. If this equipment does cause harmful interference to radio or television reception, which can be determined by turning the equipment off and on, the user is encouraged to try to correct the interference by one or more of the following measures:

- Reorient or relocate the receiving antenna.
- Increase the separation between the equipment and receiver.
- Connect the equipment into an outlet on a circuit different from that to which the receiver is connected.
- Consult the dealer or an experienced radio or television technician for help.

FCC RF Radiation Exposure Statement

Exposure to Radio-Frequency Radiation

CAUTION

To comply with FCC RF exposure compliance requirements, for mobile configurations, a separation distance of at least 20 cm must be maintained between the antenna of this device and all persons.

This device must not be co-located or operating in conjunction with any other antenna or transmitter.

13 Regulatory Addendum

Canadian Notice

This equipment does not exceed the Class B limits for radio noise emissions as described in the Radio Interference Regulations of the Canadian Department of Communications.

Le present appareil numerique n'emet pas de bruits radioelectriques depassant les limites applicables aux appareils numeriques de la classe B prescrites dans le Reglement sur le brouillage radioelectrique edicte par le ministere des Communications du Canada.

CAUTION

Do not attempt to open or otherwise service any components in the optics cavity. Opening or servicing any part of the optics cavity by unauthorized personnel may violate laser safety regulations.

Customs Union

The CU conformity certification has been achieved; this allows the Product to bear the Eurasian mark of conformity.

13.2 Power Supply

This device is intended to be connected to a UL Listed/CSA Certified computer which supplies power directly to the reader or else be supplied by UL Listed/CSA Certified Power Unit marked "Class 2" or LPS power source rated 5-14 V minimum 900 mA.

Model P/N	Power Supply
PD9530-HP	5 VDC
PD9530-DPM	5 VDC

Argentina Power Statement

Atencíon

Características de la fuente de alimentación eléctrica.

Entrada:	100 - 240 Vca min 0.35A 50-60 Hz
Salida:	5VDC, máx 2.5A (-)Negativo al centro
Entrada:	100 - 240 Vca min 600mA 50-60 Hz
Salida:	12VDC, máx1500mA (-)Negativo al centro

Utilice en su red solo fuentes certificadas en Argentina.

El uso de fuentes de alimentación no compatibles puede resultar en riesgo de incendio o de choque eléctrico para el usuario.

13 Regulatory Addendum

13.3 Imager Labeling

13.3.1 Aiming System

The PowerScan™ aiming system meets the Class 2 requirements for laser safety. The laser information is located on the sides of the Scanner as shown below.

Sample labels are shown here to illustrate their location only. Please view the labels on your product for actual details, as they may vary from those depicted.

Scanner Regulatory Labels

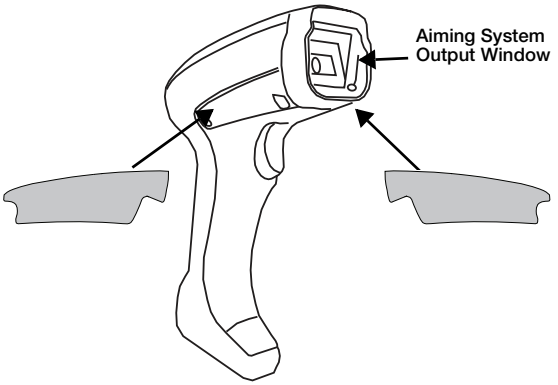

I	D	F	E
LA LUCE LASER È VISIBILE ALL'OCCHIO UMANO E VIENE EMESSA DALLA FINESTRA INDICATA NELLA FIGURA.	DIE LASERSTRAHLUNG IST FÜR DAS MENSCHLICHE AUGE SICHTBAR UND WIRD AM STRAHLAUS TRITTSFENSTER AUSGESENDET (SIEHE BILD)	LE RAYON LASER EST VISIBLE À L'OEIL NU ET IL EST ÉMIS PAR LA FENÊTRE DÉSIGNÉE SUR L'ILLUSTRATION DANS LA FIGURE	A LUZ LÁSER ES VISIBLE AL OJO HUMANO Y ES EMITIDA POR LA VENTANA INDICADA EN LA FIGURA.
LUCE LASER NON FISSARE IL FASCIO APPARECCHIO LASER DI CLASSE 2 MASSIMA POTENZA D'USCITA: LUNGHEZZA D'ONDA EMESSA: CONFORME A EN 60825-1 (2007)	LASERSTRAHLUNG NICHT IN DEN STRAHL BLICKEN PRODUKT DER LASERKLASSE 2 MAXIMALE AUSGANGSLEISTUNG: WELLENLÄGE: ENTSPR. EN 60825-1 (2007)	RAYON LASER EVITER DE REGARDER LE RAYON APPAREIL LASER DE CLASSE 2 PUISSANCE DE SORTIE: LONGUEUR D'ONDE EMISE: CONFORME A EN 60825-1 (2007)	RAYO LÁSER NO MIRAR FIJO EL RAYO APARATO LÁSER DE CLASE 2 MÁXIMA POTENCIA DE SALIDA: LONGITUD DE ONDA EMITIDA: CONFORME A EN 60825-1 (2007)

13 Regulatory Addendum

ENGLISH

The following information is provided to comply with the rules imposed by international authorities and refers to the correct use of your terminal.

STANDARD LASER SAFETY REGULATIONS

This product conforms to the applicable requirements of both CDRH 21 CFR 1040 and EN 60825-1 at the date of manufacture.

For installation, use and maintenance, it is not necessary to open the device.

WARNING

Use of controls or adjustments or performance of procedures other than those specified herein may result in exposure to hazardous visible laser light.

The product utilizes a low-power laser diode. Although staring directly at the laser beam momentarily causes no known biological damage, avoid staring at the beam as one would with any very strong light source, such as the sun. Avoid that the laser beam hits the eye of an observer, even through reflective surfaces such as mirrors, etc.

ITALIANO

Le seguenti informazioni vengono fornite dietro direttive delle autorità internazionali e si riferiscono all'uso corretto del terminale.

NORMATIVE STANDARD PER LA SICUREZZA LASER

Questo prodotto risulta conforme alle normative vigenti sulla sicurezza laser alla data di produzione: CDRH 21 CFR 1040 e EN 60825-1.

Non si rende mai necessario aprire l'appa-recchio per motivi di installazione, utilizzo o manutenzione.

ATTENZIONE

L'utilizzo di procedure o regolazioni differenti da quelle descritte nella documentazione può provocare un'esposizione pericolosa a luce laser visibile.

Il prodotto utilizza un diodo laser a bassa potenza. Sebbene non siano noti danni riportati dall'occhio umano in seguito ad una esposizione di breve durata, evitare di fissare il raggio laser così come si eviterebbe qualsiasi altra sorgente di luminosità intensa, ad esempio il sole. Evitare inoltre di dirigere il raggio laser negli occhi di un osservatore, anche attraverso superfici riflettenti come gli specchi.

13 Regulatory Addendum

DEUTSCH

Die folgenden Informationen stimmen mit den von international Behörden festgelegten Sicherheitshinweisen überein, und beziehen sich auf den korrekten Gebrauch des Scanners

NORM FÜR DIE LASERSICHERHEIT

Am Tag der Herstellung entspricht dieses Gerät den gültigen Laser-sicherheitsnormen EN 60825-1 und CDRH 21 CFR 1040.

Das Gerät muss für den Betrieb oder Installations- und Wartungs-arbeiten nicht geöffnet werden.

Es ist nicht notwendig, das Gerät wegen Betrieb oder Installations-, und Wartungs-Arbeiten zu öffnen.

Jegliche Änderungen am Gerät sowie jegliche Benutzung, die nicht in dieser Betriebsanleitung beschreiben ist, können gefährliches Laserlicht verursachen

ACHTUNG

Das Produkt verfügt über eine Laserdiode. Obwohl zur Zeit nicht bekannt ist, dass durch kurze Einstrahlung von Laserlicht ins Auge Augenschäden entstehen können, sollten Sie es vermeiden für längere Zeit in den Laserstrahl zu schauen. Richten Sie den Laserstrahl nicht auf die Augen eines Beobachters, noch auf reflektierende Oberflächen.

FRANÇAIS

Les informations suivantes sont fournies selon les règles fixées par les autorités internationales et se réfèrent à une correcte utilisation du terminal.

NORMES DE SECURITE LASER

Ce produit est conforme aux normes de sécurité laser en vigueur à sa date de fabrication: CDRH 21 CFR 1040 et EN 60825-1.

Il n’est pas nécessaire d’ouvrir l’appareil pour l’installation, l’utilisation ou l’entretien.

L'utilisation de procédures ou réglages diff-férents de ceux donnés ici peut entraîner une dangereuse exposition à lumière laser visible.

ATTENTION

Le produit utilise une diode laser. Aucun dommage aux yeux humains n’a été constaté à la suite d’une exposition au rayon laser. Eviter de regarder fixement le rayon, comme toute autre source lumineuse intense telle que le soleil. Eviter aussi de diriger le rayon vers les yeux d’un observateur, même à travers des surfaces réfléchissantes (miroirs, par exemple).

13 Regulatory Addendum

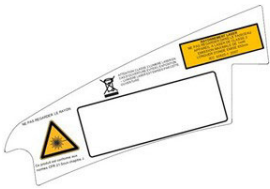

ESPAÑOL

Las informaciones siguientes son presentadas en conformidad con las disposiciones de las autoridades internacionales y se refieren al uso correcto del terminal.

NORMATIVAS ESTÁNDAR PARA LA SEGURIDAD LÁSER

Este aparato resulta conforme a las normativas vigentes de seguridad láser a la fecha de producción: CDRH 21 CFR 1040 y EN 60825-1.

No es necesario abrir el aparato para la instalación, la utilización o la manutención.

ATENCIÓN

La utilización de procedimientos o regulaciones diferentes de aquellas describidas en la documentación puede causar una exposición peligrosa a la luz láser visible.

El aparato utiliza un diodo láser a baja potencia. No son notorios daños a los ojos humanos a consecuencia de una exposición de corta duración. Eviten de mirar fijo el rayo láser así como evitarían cualquiera otra fuente de luminosidad intensa, por ejemplo el sol. Además, eviten de dirigir el rayo láser hacia los ojos de un observador, también a través de superficies reflectantes como los espejos.

CAUTION

The PowerScan™ Handheld Reader is not user-serviceable. Opening the case of the unit can cause internal damage and will void the warranty.

13 Regulatory Addendum

13.4 WEEE Statement

	Waste Electrical and Electronic Equipment (WEEE) Statement

English

Our BVS HS-P and BVS HS-Q series handheld readers are only intended for commercial use as B2B devices as per the WEEE Directive. The WEEE Directive, valid across the EU, is a standard defining how waste electrical equipment has to be handled.

For you, this means that the handheld readers must not be disposed of in normal household waste or taken to a collection point of public waste disposal authorities.

In the event of disposal, you can return the handheld reader to us. We will then ensure it is recycled in accordance with the applicable legal requirements.

For your return shipment, please use our RMA process, which you will find on our website.

We are unable to reimburse costs for shipping/packaging.

If the handheld reader to be returned is type BVS HS-QB or BVS HS-PB, the internationally valid shipping regulations for lithium-ion batteries must be observed.

German

Unsere Handheld Reader der BVS HS-P bzw. BVS HS-Q Baureihe sind ausschließlich für den gewerblichen Gebrauch vorgesehen als sog. B2B-Geräte gemäß der WEEE-Richtlinie.

Die EU-weit gültige WEEE-Richtlinie definiert einheitlich wie Elektro-Altgeräten behandelt werden müssen.

Für Sie bedeutet das, dass die Handheld Reader weder über den normalen Hausmüll entsorgt, noch bei einer Sammelstelle eines öffentlich-rechtlichen Entsorgungsträger abgeben werden dürfen. Im Falle einer Entsorgung können Sie die Handheld Reader an uns zurücksenden.

Wir stellen dann die Verwertung nach den jeweils geltenden gesetzlichen Vorschriften sicher.

Für die Rücksendung verwenden Sie bitte unseren RMA-Prozess, den Sie auf unserer Webseite finden.

Die Kosten für Versand/Verpackung können wir nicht erstatten. Falls der zurückzusendende Handheld Reader vom Typ BVS HS-QB oder BVS HS-PB ist, sind die international gültigen Versandvorschriften für Lithium-Ionen-Batterien zu beachten.

CHINA ROHS TABLE OF RESTRICTED ELEMENTS

		Lead (Pb)	Mercury (Hg)	Cadmium (Cd)	Hexavalent Chromium (Cr(VI))	Polybrominated biphenyls (PBB)	Polybrominated diphenyl ethers (PBDE)
		有毒有害物质或元素					
PART	部件名称	铅	汞	镉	六价铬	多溴联苯	多溴二苯醚
Cable	电缆	X	O	O	O	O	O
Printed Circuit Board Assembly	电路板组	X	O	O	O	O	O
Assy, Module	光学组件	X	O	O	O	O	O
Power Supply	电源	X	O	O	O	O	O

O: 代表此种部件的所有均质材料中所含的该种有毒有害物质均低于中华人民共和国信息产业部所颁布的《电子信息产品中有毒有害物质的限量要求》(SJ/T 11363-2006) 规定的限量。

X: 代表此种部件所用的均质材料中, 至少有一类材料其所含的有毒有害物质高于中华人民共和国信息产业部所颁布的《电子信息产品中有毒有害物质的限量要求》(SJ/T 11363-2006) 规定的限量

EFUP determined by "Look-up Method" (scanner). 环保使用期限取决于"查表法"（扫描仪）

13 Regulatory Addendum

13.5 Letter of Conformity

CE 14

Datalogic ADC Srl
Via S. Vitalino, 13
Lippo di Calderara di Reno (BO)
40012 Italy

EC-092
Rev.: 1
Pag.: 1 di 1

La presente dichiarazione di conformità è rilasciata sotto la responsabilità esclusiva di Datalogic ADC Srl per:
This Declaration of Conformity is issued under the sole responsibility of Datalogic ADC Srl for:
Cette déclaration de conformité est établie sous la seule responsabilité de Datalogic Srl pour:
Diese Konformitätserklärung wird unter der alleinigen Verantwortung des Datalogic ADC Srl erteilt für:
Esta declaración de conformidad se expide bajo la exclusiva responsabilidad de Datalogic ADC Srl para:

PowerScan PD9530

e tutti i suoi modelli
and all its models
et tous ses modèles
und seine Modelle
y todos sus modelos

sono conformi alle Direttive del Consiglio Europeo sottoelencate:
are in conformity with the requirements of the European Council Directives listed below:
sont conformes aux spécifications des Directives de l'Union Européenne ci-dessous:
den nachstehenden angeführten Direktiven des Europäischen Rats:
cumple con los requisitos de las Directivas del Consejo Europeo, según la lista siguiente:

2004/108/EC - EMC Directive
2011/65/EU - RoHS Directive

Basate sulle legislazioni degli Stati membri in relazione alla compatibilità elettromagnetica ed alla sicurezza dei prodotti.
On the approximation of the laws of Member States relating to electromagnetic compatibility and product safety.
Basée sur la législation des Etats membres relative à la compatibilté électromagnétique et à la sécurité des produits.
Über die Annäherung der Gesetze der Mitgliedsstaaten in bezug auf elektromagnetische Verträglichkeit und Produktsicherheit entsprechen.
Basado en la aproximación de las leyes de los Países Miembros respecto a la compatibilidad electromagnética y las Medidas de seguridad relativas al producto.

Questa dichiarazione è basata sulla conformità dei prodotti alle norme seguenti:
This declaration is based upon compliance of the products to the following standards:
Cette déclaration repose sur la conformité des produits aux normes suivantes:
Diese Erklärung basiert darauf, dass das Produkt den folgenden Normen entspricht:
Esta declaración se basa en el cumplimiento de los productos con las siguientes normas:

EN 55022 (CLASS B ITE), DECEMBER 2010:	*LIMITS AND METHODS OF MEASUREMENTS OF RADIO DISTURBANCE*
AC1 (CLASS B ITE), OCTOBER 2011:	*CHARACTERISTICS OF INFORMATION TECHNOLOGY EQUIPMENT*
EN 55024, NOVEMBER 2010:	*INFORMATION TECHNOLOGY EQUIPMENT IMMUNITY CHARACTERISTICS LIMITS AND METHODS OF MEASUREMENT*
EN 50581, SEPTEMBER 2012:	*TECHNICAL DOCUMENTATION FOR THE ASSESSMENT OF ELECTRICAL AND ELECTRONIC PRODUCTS WITH RESPECT TO THE RESTRICTION OF HAZARDOUS SUBSTANCES*

Ruggero Cacioppo

Lippo di Calderara, July, 31st, 2014

Ruggero Cacioppo

Quality & Reliability MGR - Europe

14 Ergonomic Recommendations

CAUTION

In order to avoid or minimize the potential risk of ergonomic injury follow the recommendations below. Consult with your local Health & Safety Manager to ensure that you are adhering to your company's safety programs to prevent employee injury.

- Reduce or eliminate repetitive motion
- Maintain a natural position
- Reduce or eliminate excessive force
- Keep objects that are used frequently within easy reach
- Perform tasks at correct heights
- Reduce or eliminate vibration
- Reduce or eliminate direct pressure
- Provide adjustable workstations
- Provide adequate clearance
- Provide a suitable working environment
- Improve work procedures.

14.1 Services and Support

Balluff provides several services as well as technical support through its website. Log on to **www.Balluff.com**.

Products

Search through the links to arrive at your product page where you can download specific **Manuals & Documentation, Data Sheets, Product Catalogues, etc.**.

Service & Support

- **Repair Services** - Return Material Authorization (RMA) Repairs.
- **Downloads** - download Brochures and Catalogues

Contact Us

- **www.balluff.com** - Choose your country and then click Service for your service addresses.

Notes

www.balluff.com

World Headquarters
Germany
Balluff GmbH
Schurwaldstraße 9
73765 Neuhausen a.d.F.
Deutschland
Tel. +49 7158 173-0
Fax +49 7158 5010
balluff@balluff.de
www.balluff.com

Subsidaries
USA
Balluff Inc.
8125 Holton Drive
Florence,
Kentucky 41042-0937
Phone (859) 727-2200,
1-800-543-8390
applications@balluff.com

No. 920054 EN · F20; Subject to modification. Replaces B15.