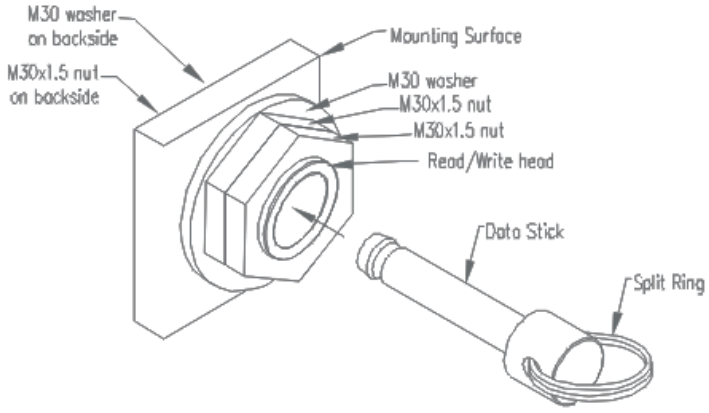

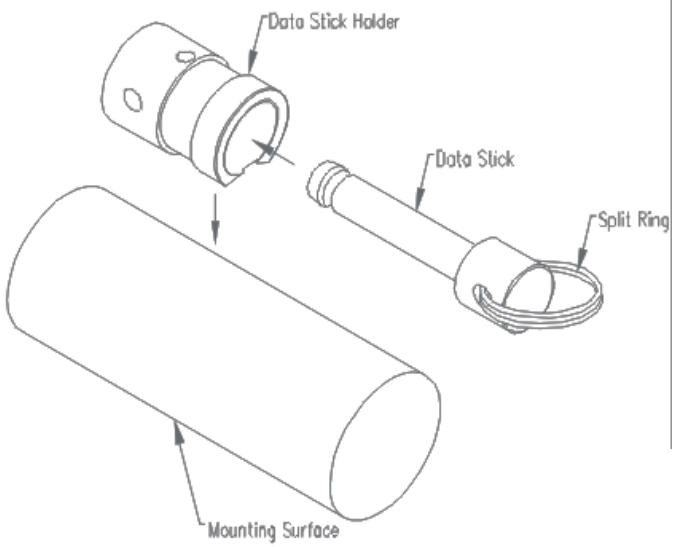

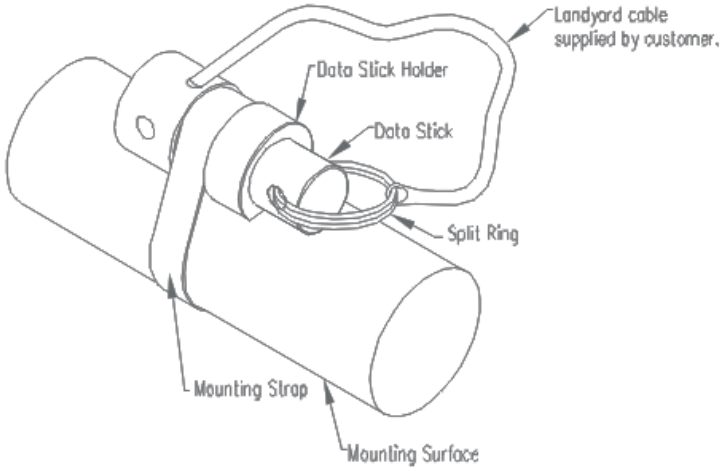

Mounting Instructions

-Mount the Read/Write head assembly with the drain hole facing down.

-Place 1 nut and 1 washer on the backside of mounting surface, and 1 washer and 2 nuts on the outside of mounting surface.

-Strap Data Stick holder to the outside of pipe or hose within landyard distance on the Data carrier. (Strapping provided by others.)

- Attach the landyard between the Data Stick and Data Stick holder using the holes provided.

-Insert read/write head completely into head housing to garentee compression of the internal o-ring against head face surface.

Doc. No. 888746/Mat. No. 222779 • EN H16; Subject to change, Replaces 1204