BALLUFF

BIS U-6028-048-104-06-ST28 PROFINET
BIS U-6028-048-114-06-ST28 PROFINET
BIS U-6028-048-124-06-ST28 PROFINET
BIS U-6028-048-134-06-ST28 PROFINET
BIS U-6028-048-104-06-ST22 PROFINET

Technical Description, Operating Manual

BISU

english

www.balluff.com

1 User instructions

1.1 About this manual

This manual describes the processor for the BIS U-6028 identification systems and startup instructions for immediate operation.

1.2 Typographical conventions

The following conventions are used in this manual.

Enumerations

Enumerations are shown as a list with an en-dash.
– Entry 1,
– Entry 2.

Actions

Action instructions are indicated by a preceding triangle. The result of an action is indicated by an arrow.
► Action instruction 1.
⇒ Action result.
► Action instruction 2.

Syntax

Numbers:
– Decimal numbers are shown without additional indicators (e.g. 123),
– Hexadecimal numbers are shown with the additional indicator $_{hex}$ (e.g. 00_{hex}).

Parameters:
Parameters are shown in italics (e.g. *Dynamic).*

Directory paths:
References to paths where data is stored or to be saved are shown in small caps (e.g. PROJECT:\DATA TYPES\USER DEFINED).

Control characters:
Control characters for sending are set in angle brackets (e.g. <ACK>)

ASCII code:
Characters sent in ASCII code are set in apostrophes (e.g. 'L').

1.3 Symbols

⚠ **Caution!**
This symbol indicates a safety instruction that must be followed without exception.

ℹ **Note, tip**
This symbol indicates general notes.

1.4 Abbreviations

BIS	Balluff Identification System
CRC	Cyclic Redundancy Check
DCP	Discovery and basic Configuration Protocol
EEPROM	Electrical Erasable and Programmable ROM
EIRP	Equivalent Isotropically Radiated Power
EMC	Electromagnetic Compatibility
EPC™	Electronic Product Code
ERP	Effective Radiated Power
FCC	Federal Communications Commission
GSD	General Station Description
GSDML	GSD Markup Language
IC	Industry Canada
IP	Internet Protocol
LBT	Listen Before Talk
LF CR	Line Feed with Carriage Return
MAC	Media Access Control
n.c.	not connected
PC	Personal Computer
PNO	PROFIBUS Nutzerorganisation e.V.
PLC	Programmable Logic Controller
Tag	Data carrier with antenna
TID	Tag identifier
UHF	Ultra-high frequency

2 Safety

2.1 Intended use

The BIS U-6028 processor is a component of the BIS U identification system. Within the identification system, it is used to connect to a higher-level controller (PLC, PC); it may only be used in the industrial sector.

This description applies for processors of the following series:
- For operation within the European Community
  BIS U-6028-048-104-06-ST22
  BIS U-6028-048-104-06-ST28
- For operation in the USA, Canada
  BIS U-6028-048-114-06-ST28
- For operation in China
  BIS U-6028-048-124-06-ST28
- For operation in Brazil
  BIS U-6028-048-134-06-ST28

2.2 Meaning of the warning notes

⚠ **Caution!**
The pictogram used with the word “Caution” warns of a situation that could harm someone's health or damage equipment. Failure to observe these warning notes may result in injury or damage to equipment.
► Always observe the described measures for preventing this danger.

2.3 General safety notes

⚠ **Caution!**
This UHF system consists of a processor and antennas according to specifications and may only be operated within the specified countries subject to all applicable national legal regulations and standards.
► When using the UHF system in the European Community, the provisions in ETSI standard EN 302 208 apply.
► When using the UHF system in the USA, the directives of FCC, Part 15, apply.
► When using the UHF system in Canada, the directives of IC, RSS-210 apply.
► When using the UHF system in Brazil, the directives of ANATEL, 506/2008 and 442/2006 apply.

Installation and startup
Installation and startup are to be performed by trained technical personnel only.
Any damage resulting from unauthorized manipulation or improper use voids the manufacturer's guarantee and liability claims against the manufacturer.When connecting the processor to an external controller, observe proper selection and polarity of the connection as well as the power supply (see “Installation” on page 9).
The processor may only be used with approved power supplies (see “Technical data” on page 12).

2 Safety

Caution!
The antennas of the BIS U identification system transmit ultra-high frequency electromagnetic waves.

IEC 62369 stipulates that personnel may not remain within close range of the UHF antenna for long periods (several hours).

For operation within the European Community:
When selecting the installation location for the processor, make sure that the minimum distance between the UHF antenna and the workplace is 26 cm.
The radiated power must not exceed the maximum permitted limit values:
– 0.5 $watt_{ERP}$ for antennas with an opening angle > 70°,
– 2.0 $watt_{ERP}$ for antennas with an opening angle ≤ 70°.

For operation in the USA, Canada and Brazil:
When selecting the installation location for the processor, make sure that the minimum distance between the UHF antenna and the workplace is 30 cm.
The radiated power must not exceed the permissible limit value of 4 $watt_{EIRP}$.

Note
See the “Basic UHF manual” for more information on minimum/maximum clearance distances and antenna power.

2.4 Conformity

BIS U-6028-048-104-06-ST22,
BIS U-6028-048-104-06-ST28

This product was developed and manufactured in accordance with all applicable European Directives. CE conformity has been verified.

Additional radio interference suppression for BIS U-6028-048-104-06-ST22:
When installing the device, power supply cables need adequate measures for radio interference suppression to ensure compliance to the limits defined in EN 55022. This is achieved by installing 3 pieces of snap ferrite “Würth No. 7427151” close to the device or by means of equivalent measures.

BIS U-6028-048-114-06-ST28

The product was developed and manufactured in accordance with the directives applicable in the USA and Canada. Conformity has been verified.

BIS U-6028-048-124-06-ST28

CMIIT-ID 2014DJ1522	The product was developed and manufactured in accordance with the directives applicable in China. Conformity has been verified.

BIS U-6028-048-134-06-ST28

The product was developed and manufactured in accordance with the directives applicable in Brazil. Conformity has been verified.

When using BIS U-6028-048-134-06-ST28 power supply has to be connected via “BIS Power supply FILTER” included in the sales package.

3 Basic knowledge

All approvals and certifications are no longer valid if:
– Components are used that are not part of the BIS U identification system
– Components are used that have not been explicitly approved by Balluff.

Operation and testing
The operator is responsible for ensuring that local safety regulations are observed. If defects and persistent faults occur in the identification system, take it out of service and secure against unauthorized use.

3.1 Function principle of identification systems

The BIS U identification system is classified as a non-contacting system with read and write unction, which not only allows it to detect information programmed permanently in the data carrier, but also to collect and pass on current information.
Main components of BIS U identification systems include:
– Processor
– Antennas
– Data carriers

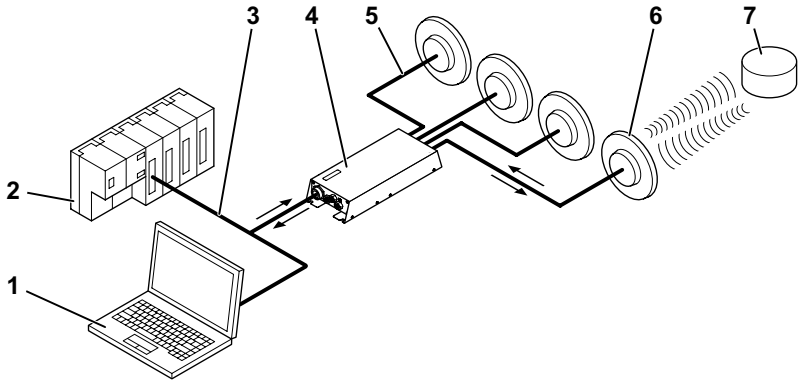

Fig. 1: System overview

1 PC
2 PLC
3 Connection to the host system
4 Processor
5 Antenna cable
6 Antennas (max. 4)
7 Data carriers

The main areas of application are:
– In the production and control of material flow (e.g. in variant-specific processes, workpiece transport in conveying systems, for acquiring safety-relevant data)
– In tool coding and monitoring
– In process equipment organization
– In warehousing for monitoring material movements
– In transporting and conveying
– in waste disposal for quantity-based fee assessment

Note
See the “Basic UHF manual” for more information on UHF identification systems.

3 Basic knowledge

3.2 Product description

- UHF-RFID (Operating frequencies see "Operating frequency and radiated power" on page 14)
- Read/write distance typically up to 6 m depending on ambient conditions and installed system components such as antennas, data carriers, cables, etc.
- Connection option for 4 antennas
- Standard interface: 2 × PROFINET
- Service interface: 1 x RS232
- Rugged metal housing
- Control displays for communication and status
- Data carrier types according to ISO 18000-6 type C or EPCglobal™ Class 1 Generation 2

3.3 Control function

The processor is the link between data carrier and controlling system. It manages two-way data transfer between data carrier and antenna and provides buffer storage.
The processor uses the antenna to write data from the controlling system to the data carrier or reads the data from the data carrier and makes it available to the controlling system.

Host systems may be the following:
- a control computer (e.g. industrial PC),
- a PLC.

Double bit header for asynchronous data transmission:
If a controller does not synchronously send the data range for updating the input/output buffer, data inconsistencies may occur when sending more than two bytes. Consistency of the sent data can then only be ensured by sending the control bits in the first byte and again in the last bytes of the input/output buffer. By comparing the two bit headers, it can be determined whether the data is fully updated and can be accepted.
This method affects neither the PLC cycle time nor the bus access time. Only one byte in the data buffer for the byte of the second bit header is required instead of using it for data.

3.4 Data integrity

In order to ensure data integrity, the data transfer between the data carrier and processor can be monitored using a CRC-16 data check.

3.5 Bus connection

Processor and controlling system are connected via PROFINET.
The PROFINET IO (decentralized peripheral) is tailored to communication between a controller and decentralized field devices.
PROFINET is a combination of ProfiBus DP and EtherNet in one system, whereby the IO view of ProfiBus is retained. The device model of PROFINET IO is also oriented towards the ProfiBus technology. The characteristics of the IO devices are, however, described by GSD files based on XML (GSDML); project planning/system integration is performed in the same way as for to ProfiBus devices.
In a PROFIBUS network, IO controllers and IO devices are connected to each other using all common network topologies: star, line, ring or tree type topologies are possible.
The BIS U-6028 has a built-in IRT switch with two ports for this purpose. This means that both RT and IRT can be used.

4 Installation

4.1 Scope of delivery of the processor

Included in the scope of delivery:
- BIS U-6028
- 5x end caps
- Safety instructions

Note
For corresponding technical documents as well as additional information on available software and accessories, see www.balluff.com.

4.2 Processor installation

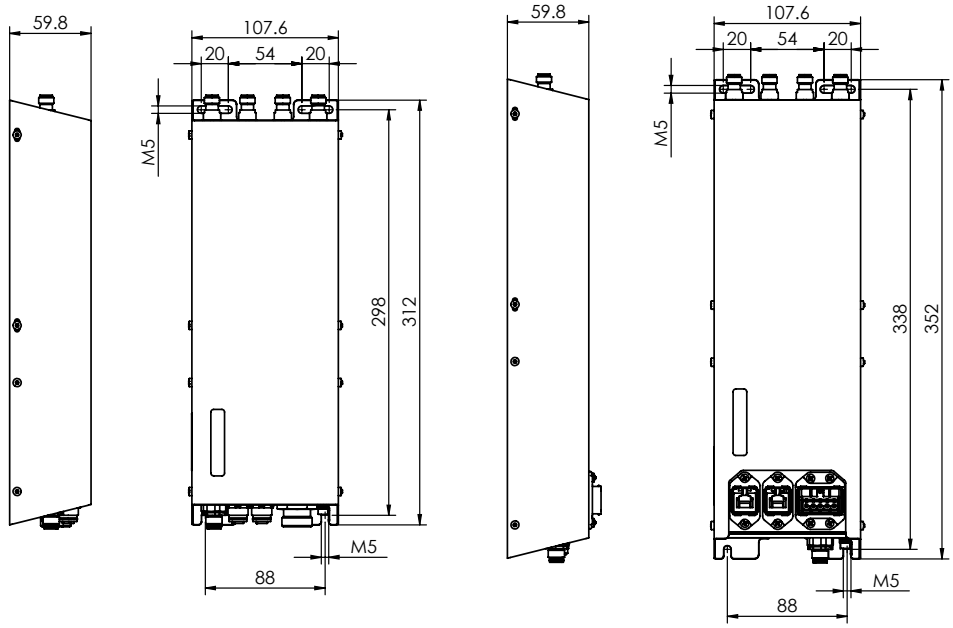

BIS U-6028-048-104-06-ST28 PROFINET,
BIS U-6028-048-114-06-ST28 PROFINET,
BIS U-6028-048-124-06-ST28 PROFINET,
BIS U-6028-048-134-06-ST28 PROFINET,

BIS U-6028-048-104-06-ST22

Fig. 2: Installation

Caution!
The antennas for the BIS U identification system transmit ultra-high frequency electromagnetic waves!
► The installation position of the processor and antennas must guarantee a safety distance between the antennas and the workplaces of personnel. For safety distances, see Chapter 2 “Safety” beginning on page 5.

The read/write distance can typically be as great as 6 m depending on the ambient conditions and installed system components. See the “Basic UHF manual” for more information on minimum/maximum clearance distances.

► Select a suitable installation position.
► Secure the processor using four M5 screws
(strength category 8.8, lightly oiled, tightening torque M = 5.2 Nm).

Note
Optional mounting plates are available for installing the processor (see Accessories on page 53).

4 Installation

4.3 Interface information/ wiring diagrams

Note
Make the ground connection either directly or using an RC combination to ground.

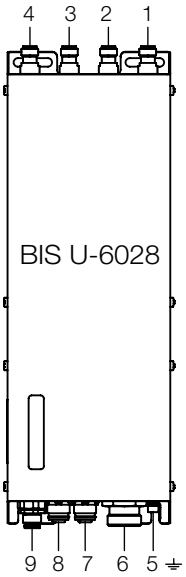

Fig. 3: Electrical connection BIS U-6028-…-ST28

1 Antenna port 1
2 Antenna port 2
3 Antenna port 3
4 Antenna port 4
5 Function ground FE
6 X1 – power supply
7 X2 – PROFINET port 2
8 X3 – PROFINET port 1
9 X4 – service interface RS232

Note
Not all antenna ports 1…4 have to be connected.

X1 - power supply

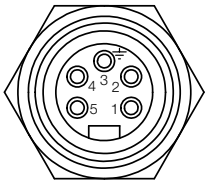

PIN	Function
1	0 V
2	0 V
3	FE
4	+24 V DC
5	+24 V DC

X2/X3 – PROFINET port 1 / port 2

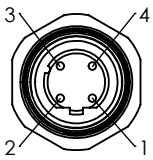

PIN	Function
1	TD+
2	RD+
3	TD-
4	RD-

X4 – service interface RS232

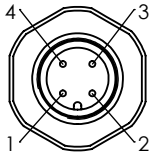

PIN	Function
1	n.c.
2	TxD
3	GND
4	RxD

4 Installation

Note
Make the ground connection either directly or using an RC combination to ground.

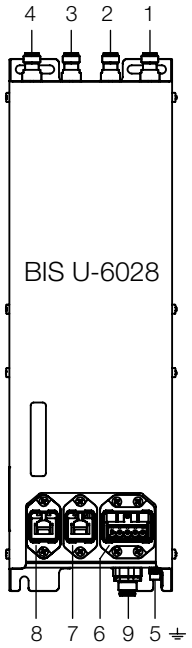

Fig. 4: Electrical connection BIS U-6028-…-ST22

1 Antenna port 1
2 Antenna port 2
3 Antenna port 3
4 Antenna port 4
5 Function ground FE
6 X1 – power supply
7 X2 – PROFINET port 2
8 X3 – PROFINET port 1
9 X4 – service interface RS232

Note
Not all antenna ports 1…4 have to be connected.

X1 - power supply

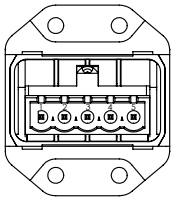

PIN	Function
1	+24 V DC
2	0 V
3	n. c.
4	n. c.
5	FE

X2/X3 – PROFINET port 1 / port 2

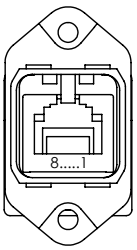

PIN	Function
1	TD+
2	TD–
3	RD+
4	n. c.
5	n. c.
6	RD–
7	n. c.
8	n. c.

X4 – service interface RS232

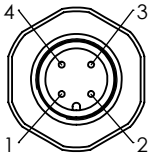

PIN	Function
1	n.c.
2	TxD
3	GND
4	RxD

5 Technical data

Dimensions
BIS U-…-ST28

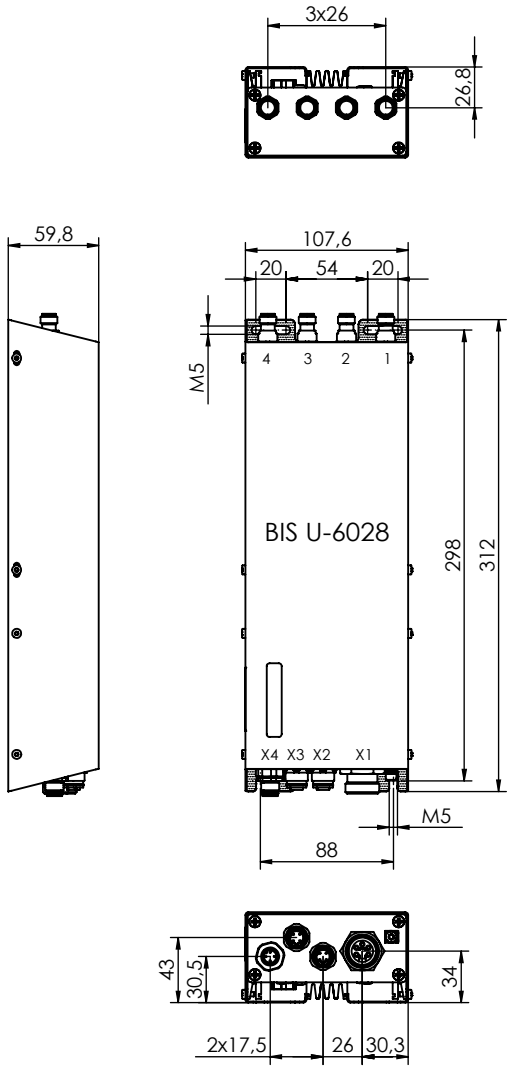

Fig. 5: Dimensions (in mm)

Mechanical data
BIS U-…-ST28

Housing material	Profiled housing and frame made from coated steel
X1 - power supply	V_s 24 V DC, panel connector 7/8", 5-pin
X2 – PROFINET port 2	M12 panel socket, 4-pin, D-coded
X3 – PROFINET port 1	M12 panel socket, 4-pin, D-coded
X4 – service port	Panel connector M12, 4-pin, A-coded
Antenna ports 1…4	Antenna socket R-TNC
Enclosure rating per IEC 60529	IP 65
Weight	2100 g

5 Technical data

Dimensions
BIS U-…-ST22

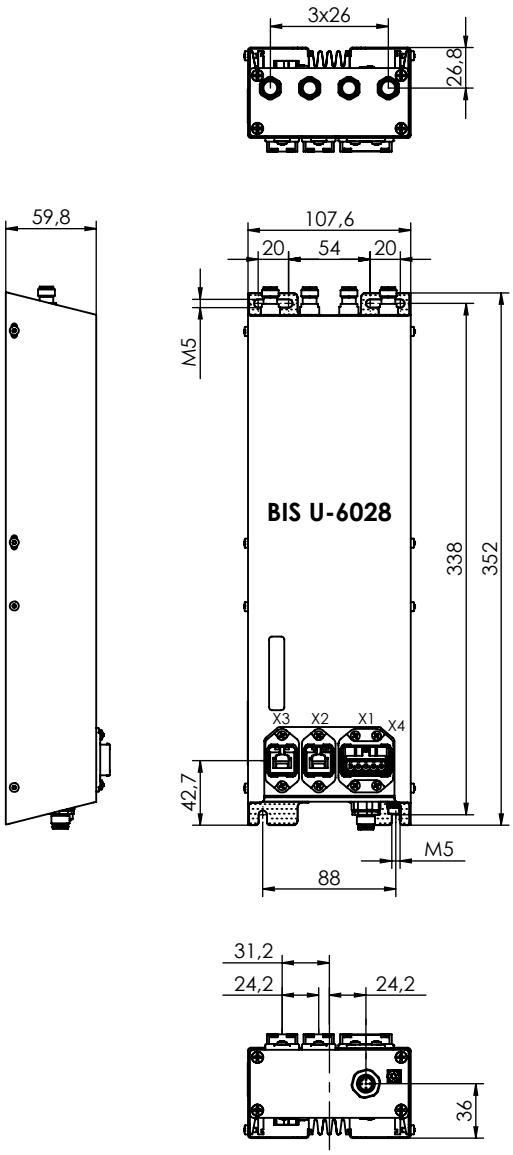

Fig. 6: Dimensions (in mm)

Mechanical data
BIS U-…-ST22

Housing material	Profiled housing and frame made from coated steel
X1 - power supply	V_s24 V DC, push-pull power connector (AIDA recommendation), 5-pin
X2 – PROFINET port 2	RJ45 plug (AIDA recommendation)
X3 – PROFINET port 1	RJ45 plug (AIDA recommendation)
X4 – service port	Panel connector M12, 4-pin, A-coded
Antenna ports 1…4	Antenna socket R-TNC
Enclosure rating per IEC 60529	IP 65
Weight	2100 g

5 Technical data

Electrical data

Operating voltage VS	24 V DC ±20 %
Ripple	≤ 10 %
Current draw at 24 V DC	≤ 1 A
X2, X3 – application interfaces	PROFINET
X4 - service interface	RS232
Characteristic impedance of the antenna ports	50 Ω

Operating frequency and radiated power

BIS U-6028-048-104-06-ST22, BIS U-6028-048-104-06-ST28

Operating frequency	865…868 MHz
Maximum permissible radiated power (ERP)	2 $watt_{ERP}$
Number of used channels	4 ETSI channels: 4, 7, 10, 13
Channel selection process	Manual (channel assignment diagram)

BIS U-6028-048-114-06-ST28

Operating frequency	902…928 MHz
Maximum permissible radiated power (EIRP)	4 $watt_{EIRP}$
Number of used channels	52
Channel selection process	Automatic (frequency hopping method)

BIS U-6028-048-124-06-ST28

Operating frequency	920,5…924,5 MHz
Maximum permissible radiated power (EIRP)	2 $watt_{EIRP}$
Number of used channels	16
Channel selection process	Automatic (frequency hopping method)

BIS U-6028-048-134-06-ST28

Operating frequency	915…928 MHz
Maximum permissible radiated power (EIRP)	4 $watt_{EIRP}$
Number of used channels	26
Channel selection process	Automatic (frequency hopping method)

Operating conditions

Ambient temperature	-20 °C…+55 °C
Storage temperature	–20 °C…+60 °C
EMC (Europe only) IEC 61000-6-2* ETSI EN 301 489 -1 / -3: – Severity level as per EN 61000-4-2/3/4/5/6 – RF emission as per EN 55022	 – 2B/3A/DC supply lines 3B, signal lines 4B/2B/3A – Size 1, Cl. A
Vibration/shock	EN 60068 Part 2-2-6/27/29/32

5 Technical data

* Frequency band exempt from the test: 440 MHz to 465 MHz

This UHF system consists of a processor and antennas as outlined in the specifications and may only be operated in industrial environments and only in the listed countries issuing operating licenses, subject to all applicable national legal regulations and standards.
(see Chapter 2 “Safety” beginning on page 5).

Data carriers

ISO 18000-6	Type C
EPCglobal™	Class 1 Generation 2

Multi-tagging

Configured EPC length	Maximum number of data carriers (Sum of all active antennas)
96 Bit	25 data carriers
496 Bit	15 data carriers

Note
Multitagging operation is supported starting with device software version 1.2 (see part label).

Function indicators

Operating states	Ready	Green LED
	Fault	Red LED
	Tag Present	Yellow LED
	Tag Operating	Yellow LED
	LNK1, LNK2	Yellow LED
	ACT1, ACT2	Yellow LED
	STA	Yellow LED
	BF	Yellow LED

6 Bus connection

6.1 Project planning

During the project planning of fieldbus devices, a physical device is mapped as a modular system consisting of a head module and multiple data modules. The device data needed for project planning are stored in GSD files (**G**eneral-**S**tation-**D**escription) in GSDML format (**G**eneral **S**tation **D**escription **M**arkup **L**anguage).

GSD file

The GSDML file for the BIS U-6028 can be downloaded from the BALLUFF website.
The data modules of an IO-Link device are represented in the project planning software by slot. The GSDML file provides the possible data modules (inputs or outputs of various data width). For the configuration of an IO-Link device, the appropriate data modules are assigned to a particular slot.

Data modules

Input and output modules of 8 bytes, 16 bytes, 32 bytes, 64 bytes, 128 bytes and 254 bytes can be configured.

Integration in project planning software

Project planning is performed, e.g., with the “SIMATIC NCM PC Manager” or “STEP 7” project planning tools.
The following steps are generally necessary for integrating a BIS U-6028 processor:

1. Install the GSDML file of the IO device in the hardware configuration
2. Update catalog
3. Use “Insert object” to add the “BIS U-6028_RT” IO device.
4. Insert the two modules for inputs and outputs
   (e.g. “RT 32 Byte I” and “RT 32 Byte O” for the “BIS U-6028_RT” processor)

Additional project planning steps:

5. The name suffix “RT” or “IRT” indicates how the read and write data is exchanged.

> **Note**
> The processor has a two-port IRT switch and is therefore able to pass IRT data packets.

The object properties of the modules can be used to set the start addresses of the input and output data.

> **Note**
> The input and output data can be used to control the BIS U-6028 as described in Chapter “Device function” on page 27.

6.2 Device name and IP address

6. The object properties of the inserted object “u-6028” can be used to assign the device name, the device number and the IP address.

The processor and the host system communicate via the PROFINET protocol.
This means an IP address and a unique device name are required. The device name and IP address can be saved in the IO device using “Target system > Ethernet > Edit Ethernet device”.

> **Note**
> The BIS U-6028 processor is shipped without a device name. In the included GSDML file, the device name “u-6028” is preset.

7 Configuring the processor

The configuration of the processor is divided into two parts. One part is the configuration of the BUS parameters. The other is the configuration of the application parameters.
The BUS parameters are configured directly via PROFINET and describe the behavior of the PROFINET interface, see Chapter "BUS parameters" on page 17
The application parameters are configured via the service interface (RS232) and specify the behavior of the processor with respect to the application, see Chapter "Application parameters" on page 19

7.1 BUS parameters

Basic knowledge

Schematic structure of the total buffer (process data)

Buffer 1 (for antenna 1 or antenna 3)
Buffer 2 (for antenna 2 or antenna 4)

Dynamic mode

If the dynamic mode function (Dynamic) is enabled, the evaluation unit accepts the read/write job from the controlling system and saves it, regardless of whether a data carrier is in the active range of the antenna. If a data carrier enters the active range of the antenna, the stored job is run.

Antenna number

If this parameter is activated, the antenna number of the currently selected antenna is displayed in the bit header.

Parameter configuration

The configuration is performed during project planning/integration using a project planning software program such as "SIMATIC NCM PC Manager" or "STEP 7". Alternately, the configuration bytes can be sent directly using the controller.
The parameters for operating the processor are stored in the GSDML file.

GSDML file
The GSDML file contains all the device parameters for the processor.

Parameter overview
- Dynamic 1/2:
  If dynamic mode is configured, a read/write job can be sent even though no data carrier is present in the active range of the antenna. If a data carrier now arrives at the antenna, the command is immediately executed (saves time).
- Buffer 1:
  This value indicates how many bytes of the entire input and output buffer should be used for buffer 1. The remainder of the input and output buffer is then available for buffer 2.
- ShowAntenna:
  If this is configured, the selected antenna (1 or 3 in buffer 1 or 2 or 4 in buffer 2) in the bit header of the respective buffer is displayed.

7 Configuring the processor

Parameter configuration during project planning

The project planning software (e.g. “SIMATIC NCM PC Manager” or “STEP 7”) can be used to configure the processor in the hardware configuration.
To do this, the added IO device is selected and the object properties opened by right-clicking “u-6028” on slot 0:

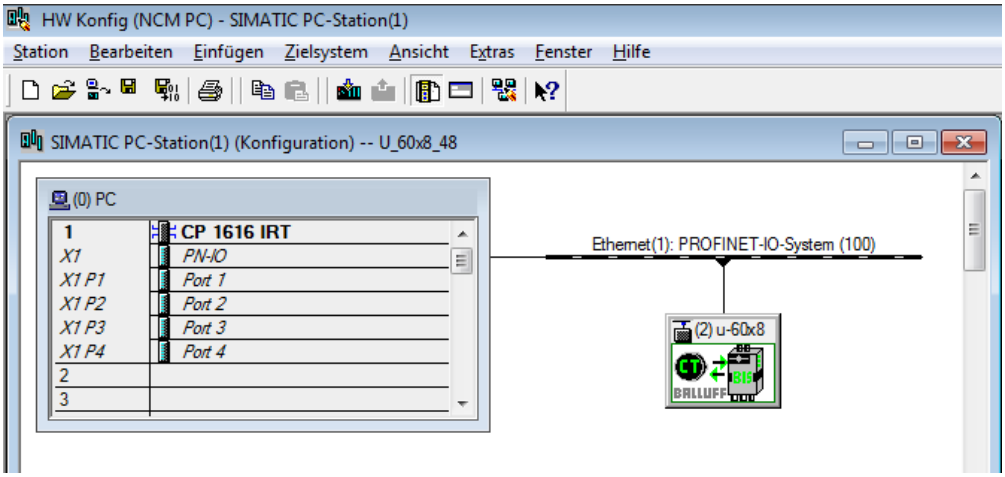

The “Parameters” tab is used to open the selection window for parameters:

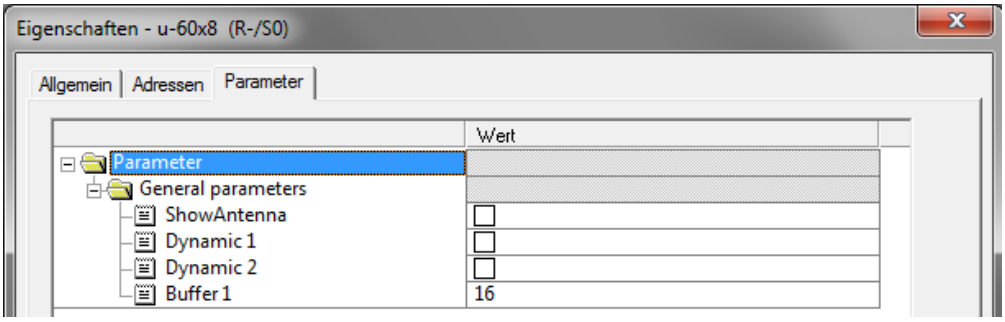

7 Configuring the processor

7.2 Applications parameters

Default settings

The device is preset ex works. The default settings are highlighted for the respective parameters.

Some parameters are fixed and cannot be modified:

Multiplexing:
The multiplexing sequence and the dwell time in front of each antenna are fixed.
– The sequence in which the antennas are activated is always 1-2-3-4-1-2-….

Configuration software

Configuration is performed using the “BIS UHF Manager” software.
One requirement is that the processor is connected to the controlling system via the service interface (RS232). The configuration can be overwritten at any time.
The parameters can be saved in an XML file so that they can be retrieved whenever needed.

> **Note**
> Detailed information on the “BIS UHF Manager” can be found in the software's online help system.

► Start “BIS UHF Manager”.
► Click “Device Settings” and “Parameters…” in the menu bar.
⇒ The “Parameters” window appears.

> **Note**
> Only the parameters listed in the following sections can be modified. The area for configuring advanced device parameters is password-protected and can only be accessed by a Balluff service technician.

7 Configuring the processor

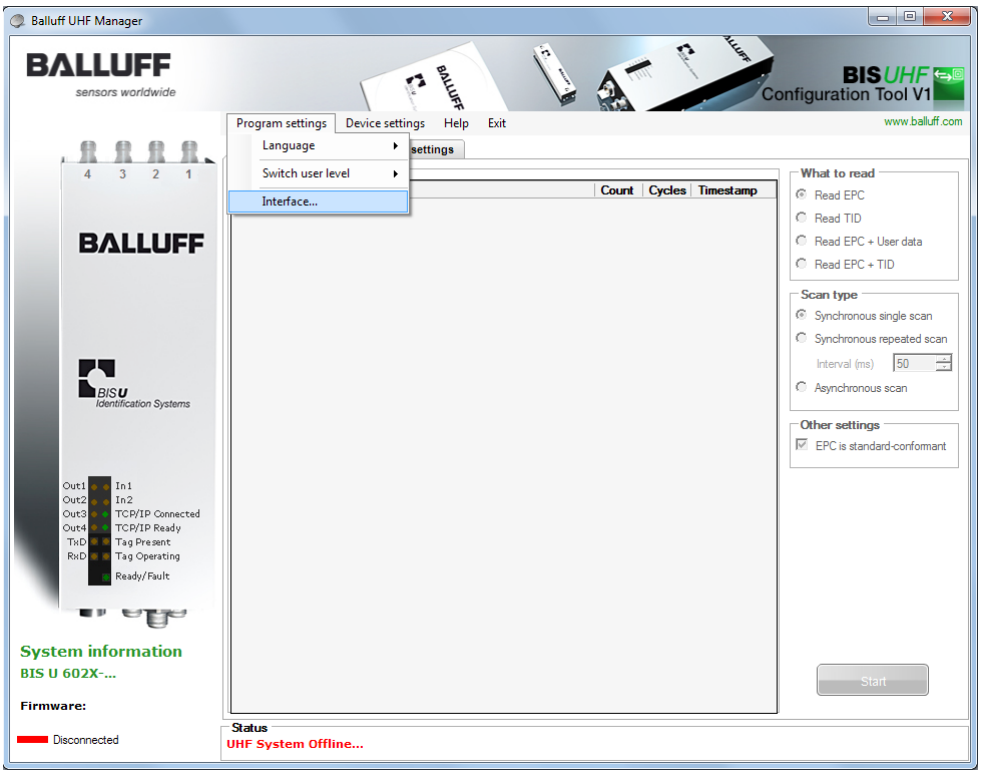

► Start “BIS UHF Manager”.
  ⇒ If “Connect on startup” was selected in the “Interface Settings” window (factory setting), the device automatically attempts to establish the last identified connection.

If the device is able to establish the last identified connection, “BIS connected...” appears in the status bar.

If the device is not able to establish a connection, “BIS not connected...” appears in the status bar.
The device must then be connected manually:
► Click “Program settings” and “Interface” in the menu bar.
  ⇒ The “Interface Settings” window opens.

7 Configuring the processor

Interface settings Service interface (RS232)

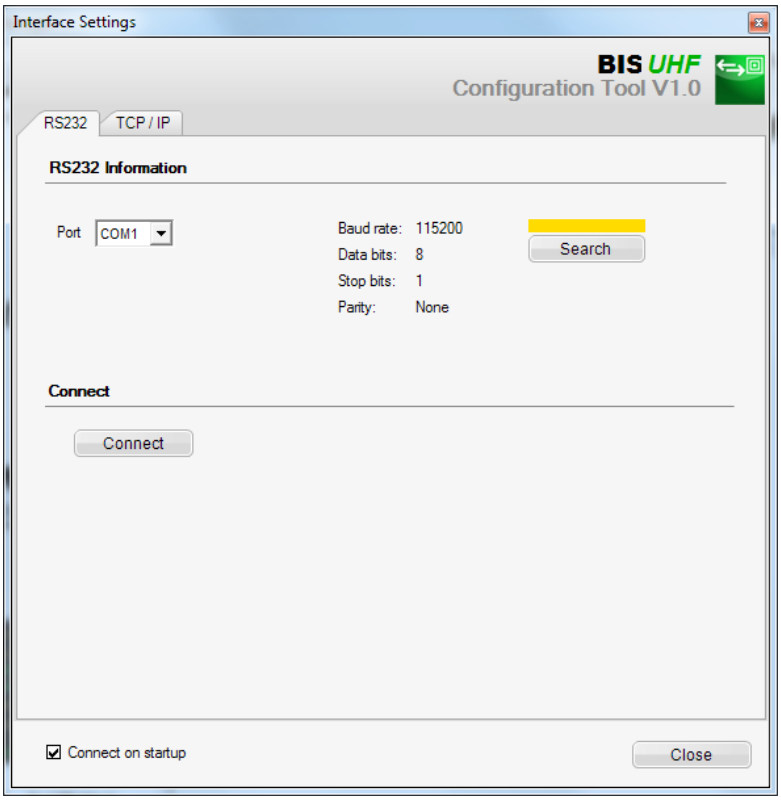

When the program starts, the device automatically connects if “Connect on startup” was selected
in the “Interface Settings” window (factory setting).

When the “Interface Settings” window is opened, the last identified connection is displayed and the bar above the “Search” button is highlighted yellow.

► Click the “Search” button.
  ⇒ The program searches for connections.

If the program finds a connection, the connection settings are displayed and the bar above the “Search” button is highlighted green.
► Click the “Connect” button.
  ⇒ The device is connected.

If the program does not find a connection, the bar above the “Search” button is highlighted red.

7 Configuring the processor

Device Settings

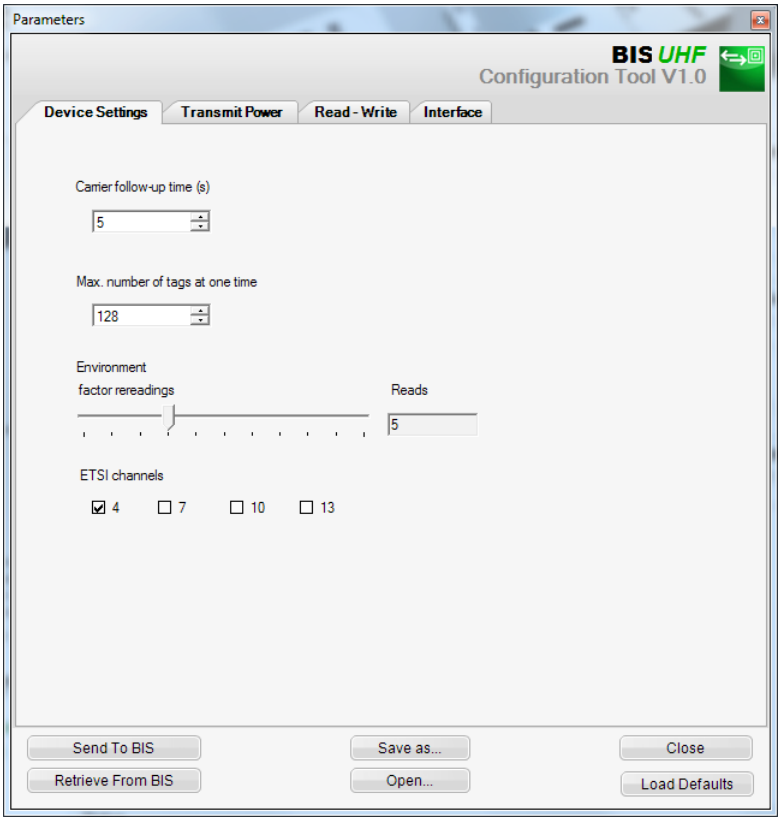

Carrier follow-up time
Follow-up time in seconds of the switched-on antennas after the command is sent. The read or write command should be executed within this time after it is detected.

Default setting: *5 seconds*

Max. number of tags at the same time
Maximum number of data carriers expected in the field.

Default setting: *128*

Environment
Factor rereadings (only for asynchronous detection or dynamic mode)

Number of rereadings after which a data carrier is reported as present (tag coming) or number of failed rereadings after which a data carrier is reported as not present (tag going) (only in dynamic mode).

Default setting: *5*

ETSI channels
The channel setting determines the channel assignment. If multiple channels are activated, these are automatically selected by the device by means of the frequency hopping method.

Default setting: *channel 4 switched on, channels 7…13 switched off*

Note
The ETSI channels selection is only available when using the devices within the European Community.

7 Configuring the processor

Transmit Power

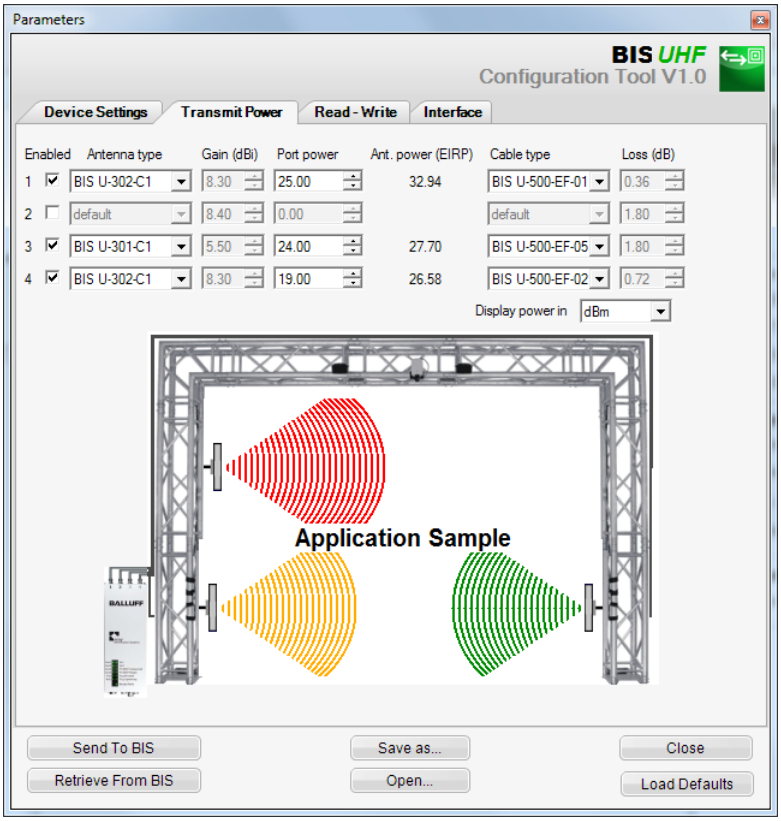

Note
The *Gain* and *Loss* parameters are defined in the *Antenna type* and *Cable type* fields. These values are used to determine the maximum permissible radiated power.

The maximum permissible radiated power and factory settings differ depending on the set country profile. For information on the valid regulations of the different countries, see Chapter 2 “Safety”.

In the countries of the European Union, the radiated power is specified in the form of an ERP power (max. 2 $watt_{ERP}$).

In the USA, Canada and Brazil, the radiated power is specified in the form of an EIRP power (max. 4 $watt_{EIRP}$).

See the “Basic UHF manual” for more information on radiated powers.

7 Configuring the processor

Enabled:
Enables/disables antennas 1…4.

Default setting: *antenna 1 enabled, antennas 2…4 disabled.*

Antenna type
Selection of the used antenna.

Default setting: *BIS U-302-C1 or BIS U-302-C0*

Port power
For selecting the power on the device (socket power).

Default setting: *22.5 dBm (176 mW) or 20.5 dBm (112 mW)*

Antenna power
Power at the antenna (EIRP or ERP).

Default setting: *27 dBm (500 mW)*

Cable type
Selection of the used cable.

Default setting: *BIS U-500-EF-05*

7 Configuring the processor

Read - Write

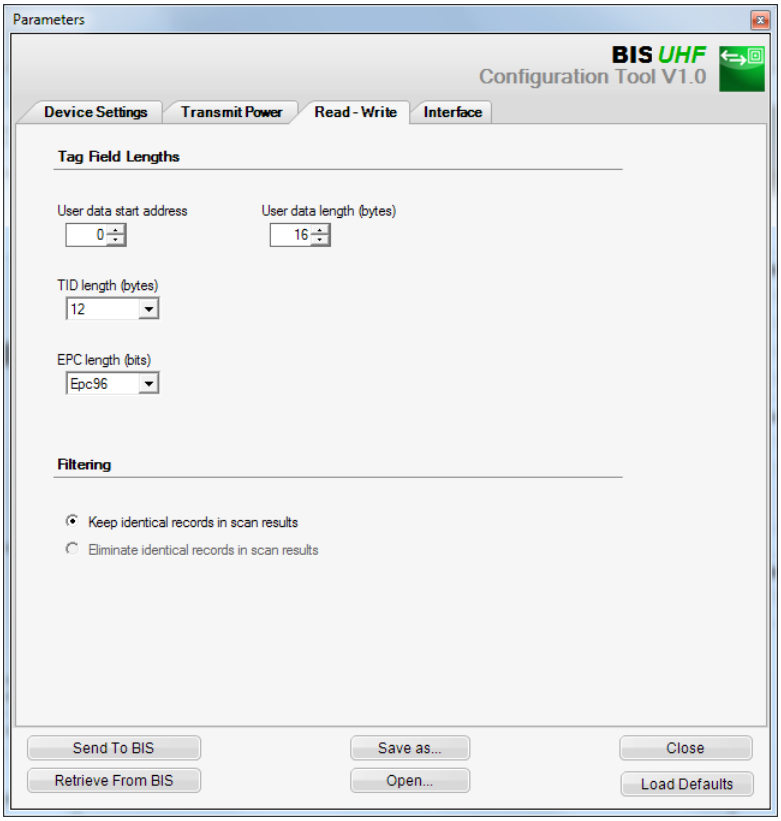

Tag Field Lengths area

User data start address
Start address of the USER data for automatic reading during data carrier searches and if USER data is used as an address during reading or writing.

Default setting: *0 bytes*

User data length
Length of the USER data for automatic reading during data carrier searches and if USER data is used as an address during reading or writing. The value range is 1 to 16.

Default setting: *16 bytes*

TID length
Length of the TID data with value range from 2 to 12.

Default setting: *12 bytes*

Note
If data carriers have a length other than the TID set here, it is possible that they cannot be read from or written to.

7 Configuring the processor

EPC length
Length of the EPC format on the data carriers. This parameter determines the maximum length of the EPC data to be processed and the output format for the command "Read multiple data carriers (EPC)".

Default setting: *96 bits*

Note
If the actual EPC length of the data carriers is not equivalent to 96 bits, set the value to 496 bits. Otherwise the read and write commands cannot be run without errors.

8 Device function

8.1 Function principle of the BIS U-6028

Two buffers are needed to exchange data and commands between the processor and the host system. The buffer contents are exchanged using cyclical polling. The buffer content depends on the cycle in which it is written (e.g. control commands at the beginning of a job).
When writing the buffer, the sent data from the preceding cycle are overwritten. Unwritten bytes are not deleted and retain their data content.

Total buffer

The buffer size of the total buffer corresponds to the plugged-in RT module. Allocation of this total buffer over the two antennas is performed using the "*Buffer 1*" parameter. To be able to read or write the USER data, a buffer size of at least 9 bytes is needed.

Example:
If a total buffer of 16 bytes is selected and the "*Buffer 1*" *(Antenna 1/3)* parameter is set to 10 bytes, 6 bytes then remain for antenna 2/4.

Two bytes less per antenna are available for data exchange, since the first and last byte of the respective data buffer is used for control and for status messages.

Output buffer

The control commands for the identification system and the data to be written to the data carrier are sent via the output buffer.

Bit no. / Subaddress	7	6	5	4	3	2	1	0
00_{hex} = 1st bit header		TI	KA	HD		GR		AV
01_{hex}	Command designator or data							
02_{hex}	Start address (Low Byte) or data or number of bytes							
03_{hex}	Start address (Middle Byte) or data							
04_{hex}	Start address (High Byte) or data							
05_{hex}	Number of bytes (Low Byte) or data							
06_{hex}	Number of bytes (Middle Byte) or data							
07_{hex}	Number of bytes (High Byte) or data							
…	Data							
Last byte = 2nd bit header		TI	KA	HD		GR		AV

8 Device function

Output buffer (continued)

Configuration and explanation (output buffer)

Subaddress	Bit name	Meaning	Function description
00_{hex} = bit header	TI	Toggle-bit in	Controller is ready to receive additional data (read job).
	KA	Antenna deactivation	Activates or deactivates the antenna selected with HD. 0: activated 1: deactivated
	HD	Antenna selection	Selection of the antennas for buffer 1 and buffer 2. Buffer 1: 0: antenna 1, 1: antenna 3 Buffer 2: 0: antenna 2, 1: antenna 4
	GR	Ground state	The processor goes into base state for the respective antenna. Any pending job is canceled.
	AV	Job	A job is pending for the respective antenna.

Command designators

The device software (see part label) supports the following command IDs:

Command	Command designator	Until software version 1.1	Software version 1.2 and later
No command	00_{hex}	Yes	Yes*
Read data carrier (USER data)	01_{hex}	Yes	Yes
	81_{hex}	No	Yes*
Read EPC	03_{hex}	Yes	Yes
	42_{hex}	No	Yes*
Read TID	05_{hex}	Yes	Yes
	44_{hex} -	No	Yes*
Write data carrier (USER data)	02_{hex}	Yes	Yes
	82_{hex}	No	Yes*
Write EPC	04_{hex}	Yes	Yes
	43_{hex} -	No	Yes*
Write constant value (USER data)	32_{hex}	Yes	Yes
	$B2_{hex}$	No	Yes*
Set antenna power	45_{hex} -	No	Yes*
Read out antenna power	46_{hex} -	No	Yes*
Read multiple data carriers (EPC)	47_{hex} -	No	Yes*
Read number of tags	55_{hex} -	No	Yes*
Select (select data carrier)	40_{hex} -	No	Yes*
Unselect (unselect)	41_{hex} -	No	Yes*

* This command ID is recommended for new systems since it is compatible with other BIS product families.

8 Device function

Input buffer

The input buffer is used to send the data read by the identification system, the designations and the status codes to the controlling system.

Bit No. / Subaddress	7	6	5	4	3	2	1	0
00_{hex} = 1st bit string	BB	HF	TO	AN	AF	AE	AA	TP
01_{hex}	Status code or Data							
02_{hex}	Data							
…	Data							
Last byte = 2nd bit string	BB	HF	TO	AN	AF	AE	AA	TP

Configuration and explanation (input buffer)

Subaddress	Bit name	Meaning	Function description
00_{hex} = bit string	BB	Ready	Processor unit is ready for operation.
	HF	Antenna error	Cable breakage at antenna or no antenna connected.
	TO	Toggle bit out	**Read operation:** additional data is made available by the processor unit. **Write operation:** processor unit can accept additional data.
	AN	Antenna	Selected antenna. Buffer 1: 0: antenna 1, 1: antenna 3 Buffer 2: 0: antenna 2, 1: antenna 4
	AF	Job error	Error in processing the job or job canceled.
	AE	Job end	Confirmation – Job finished without error.
	AA	Job start	Confirmation – Job was recognized and started.
	TP	Tag present	Data carrier is in the range of the antenna (only in connection with read, write and list commands).

8 Device function

Input buffer (continued)

Structure of the input buffer

The process data buffer is identical for all commands.

Subaddress	Meaning	Function description
00_{hex}	1st bit string	
01_{hex}	Status code or data	– If AF bit 1: provides information on the status of a query – If AF bit 0: data is written as with the individual commands
…	Data	– If AF bit 1: unused – If AF bit 0: data
Last byte	2nd bit string	If first and second bit strings agree, there is valid data present.

Information

- The status code is only sent if the AF bit is set in the bit string.
- Because the read EPC can have varying lengths (number of bytes), a length field is sent. The maximum processed EPC length (12 bytes or 62 bytes) is configured.
- The TID is always sent in a 12-byte frame. The actual length within this frame is configured (see Chapter "BUS Parameters", page 17 and Chapter "Application Parameters", page 19).

Status codes

Information
Status codes are only valid in combination with the AF bit!

Subaddress	Function description
01_{hex}	Job cannot be executed because there is no active data carrier in the active range of the antenna.
02_{hex}	Not possible to read the data carrier.
03_{hex}	Data carrier was removed from the range of the antenna during reading.
04_{hex}	Cannot write to the data carrier.
05_{hex}	Data carrier was removed from the range of the antenna during writing.
07_{hex}	No or invalid command designator with set AV bit or the number of bytes is 00_{hex}.
09_{hex}	Cable breakage at antenna or no antenna connected.
$0E_{hex}$	There is more than 1 data carrier or more than 1 selected data carrier in the active range of the antenna and the executed command is valid only for individual data carriers.
$0F_{hex}$	First and second bit string not equal. The second bit string must be used.
43_{hex}	Error when reading or writing parameters of the internal memory.
44_{hex}	Arbitrary device behavior.
46_{hex}	Command outside the address range of the data carrier.
$4E_{hex}$	No antenna activated.

8 Device function

Communication

Communication between the controlling system and processor unit is defined by a sequence protocol. Communication between the controlling system and processor unit is implemented using control bit in the output and input buffer.

Basic sequence

1. The controller sends a command designator to the processor unit in the output buffer with the AV bit set. The AV bit tells the processor unit that a job is beginning and the transmitted data is valid.
2. The processor unit accepts the job and confirms the job by setting the AA bit in the input buffer.
3. If additional data needs to be exchanged for the job, readiness for additional data exchange is indicated by inverting the TI and TO toggle bits.
4. The processor unit has correctly executed the job and sets the AE bit in the input buffer.
5. The controller has accepted all data. The AV bit in the output buffer is reset.
6. The processor unit resets all control bits set in the input buffer during the job (AA bit, AE bit). The processor unit is ready for the next job.

Structure of the output buffer for various commands

Command designator 00_{hex}: No command present

Subaddress	Meaning	Function description
00_{hex}	1st bit string	
01_{hex}	Command designa-tor	00_{hex}: No command present.
…	None	No meaning
Last byte	2nd bit string	If first and second bit strings agree, there is valid data present.

Command designator 81_{hex} or 01_{hex}: Read individual data carrier (USER data)

Subaddress	Meaning	Function description
00_{hex}	1st bit string	
01_{hex}	Command designator	81_{hex}: read data carrier (USER data).
02_{hex}	Start address 1 (Low Byte)	Start address (Low Byte) from which reading is to start.
03_{hex}	Start address 2 (Middle Byte)	Start address (Middle Byte) from which reading is to start.
04_{hex}	Start address 3 (High Byte)	Start address (High Byte) from which reading is to start.
05_{hex}	Number of bytes 1 (Low Byte)	The number of bytes (Low Byte) that are to be read starting from the start address.
06_{hex}	Number of bytes 2 (Middle Byte)	The number of bytes (Middle Byte) that are to be read starting from the start address.
07_{hex}	Number of bytes 3 (High Byte)	The number of bytes (High Byte) that are to be read starting from the start address.
…	None	No meaning
Last byte	2nd bit string	If first and second bit strings agree, there is valid data present.

8 Device function

Command description (continued)

If execution is successful, the response is passed to the input buffer in the following format:

Subaddress	Meaning	Function description
00_{hex}	1st bit string	
01_{hex}	Data	Transmission of data that was read from the data carrier.
…	Data	Transmission of data that was read from the data carrier. … is continued, if necessary, in further buffer transmissions until the total number of bytes is reached.
Last byte	2nd bit string	If first and second bit strings agree, there is valid data present.

Command designator 42_{hex} or 03_{hex}: Read individual data carrier (EPC)

Subaddress	Meaning	Function description
00_{hex}	1st bit string	
01_{hex}	Command designator	03_{hex}: Read data carrier (EPC).
…	None	No meaning
Last byte	2nd bit string	If first and second bit strings agree, there is valid data present.

If execution is successful, the response is passed to the input buffer in the following format:

Subaddress	Meaning	Function description
00_{hex}	1st bit string	
01_{hex}	Data	Number of bytes of the EPC read
…	Data	Transmission of EPC data that was read from the data carrier. … is continued, if necessary, in further buffer transmissions until the total number of bytes is reached.
Last byte	2nd bit string	If first and second bit strings agree, there is valid data present.

8 Device function

Command description (continued)

Command designator 44_{hex} or 05_{hex}: Read individual data carrier (TID)

Subaddress	Meaning	Function description
00_{hex}	1st bit string	
01_{hex}	Command designa-tor	05_{hex}: read data carrier (TID).
…	None	No meaning
Last byte	2nd bit string	If first and second bit strings agree, there is valid data present.

If execution is successful, the response is passed to the input buffer in the following format:

Subaddress	Meaning	Function description
00_{hex}	1st bit string	
01_{hex}	Data	Transmission of TID data that was read from the data carrier.
…	Data	Transmission of TID data that was read from the data carrier. … is continued, if necessary, in further buffer transmissions until the total number of bytes is reached.
Last byte	2nd bit string	If first and second bit strings agree, there is valid data present.

8 Device function

Command description (continued)

Command designator 82_{hex} or 02_{hex}: Write to individual data carrier (USER data)

Subaddress	Meaning	Function description
00_{hex}	1st bit string	
01_{hex}	Command designa-tor	82_{hex}: Write to data carrier (USER data).
02_{hex}	Start address 1 (Low Byte)	Start address (Low Byte) from which writing is to start.
03_{hex}	Start address 2 (Middle Byte)	Start address (Middle Byte) from which writing is to start.
04_{hex}	Start address 3 (High Byte)	Start address (High Byte) from which writing is to start.
05_{hex}	Number of bytes 1 (Low Byte)	The number of bytes that are to be written starting from the start address (Low Byte).
06_{hex}	Number of bytes 2 (Middle Byte)	The number of bytes that are to be written starting from the start address Middle Byte).
07_{hex}	Number of bytes 3 (High Byte)	The number of bytes that are to be written starting from the start address (High Byte).
…	None	No meaning
Last byte	2nd bit string	If first and second bit strings agree, there is valid data present.

Data is accepted from the processor unit only after the command has been accepted by the processor unit and acknowledged.

00_{hex}	1st bit string	
01_{hex}	Data	Transmission of the data that is to be written to the data carrier.
…	Data	Transmission of the data that is to be written to the data carrier.
Last byte	2nd bit string	If first and second bit strings agree, there is valid data present.

8 Device function

Command description (continued)

Command designator 43_{hex} or 04_{hex}: Write to individual data carrier (EPC)

Subaddress	Meaning	Function description
00_{hex}	1st bit string	
01_{hex}	Command designator	04_{hex}: Write to data carrier (EPC).
02_{hex}	No. of bytes	Number of bytes (1…62) to be written beginning with the start address 00_{hex}.
…	None	No meaning
Last byte	2nd bit string	If first and second bit strings agree, there is valid data present.

Data is accepted from the processor unit only after the command has been accepted by the processor unit and acknowledged.

Subaddress	Meaning	Function description
00_{hex}	1st bit string	
01_{hex}	Data	Transmission of the data that is to be written to the data carrier.
…	Data	Transmission of the data that is to be written to the data carrier.
Last byte	2nd bit string	If first and second bit strings agree, there is valid data present.

Command designator $B2_{hex}$ or 32_{hex}: Write constant value to individual data carrier (USER data)

Subaddress	Meaning	Function description
00_{hex}	1st bit string	
01_{hex}	Command designator	$B2_{hex}$: Write to data carrier (USER data).
02_{hex}	Start address 1 (Low Byte)	Start address (Low Byte) from which writing is to start.
03_{hex}	Start address 2 (Middle Byte)	Start address (Middle Byte) from which writing is to start.
04_{hex}	Start address 3 (High Byte)	Start address (High Byte) from which writing is to start.
05_{hex}	Number of bytes 1 (Low Byte)	The number of bytes that are to be written starting from the start address (Low Byte).
06_{hex}	Number of bytes 2 (Middle Byte)	The number of bytes that are to be written starting from the start address Middle Byte).
07_{hex}	Number of bytes 3 (High Byte)	The number of bytes that are to be written starting from the start address (High Byte).
…	None	No meaning
Last byte	2nd bit string	If first and second bit strings agree, there is valid data present.

Data is accepted from the processor unit only after the command has been accepted by the processor unit and acknowledged.

00_{hex}	1st bit string	
01_{hex}	Data	Value that is to be written to the data carrier.
…	None	No meaning
Last byte	2nd bit string	If first and second bit strings agree, there is valid data present.

8 Device function

Command description (continued)

Command designator 45_{hex}: Set antenna power

Subaddress	Meaning	Function description
00_{hex}	1st bit string	
01_{hex}	Command designator	45_{hex}: Set antenna power
02_{hex}	Antenna power	Antenna power for the current antenna (head) in increments of 0.25 dBm Permitted value range (decimal): **BIS U-6028-048-104-… :** 68 (+17.00 dBm ERP)…132 (+33.00 dBm ERP) **BIS U-6028-048-114-… and BIS U-6028-048-134-… :** 77 (+19.25 dBm EIRP)…144 (+36.00 dBm EIRP) The set power is not permanently saved and is reset to the saved default value when the reader is booted. The socket power on the device is calculated and set based on the configured antenna/cable parameters.
…	None	No meaning
Last byte	2nd bit string	If first and second bit strings agree, there is valid data present.

Command designator 46_{hex}: Read out antenna power

Subaddress	Meaning	Function description
00_{hex}	1st bit string	
01_{hex}	Command designator	46_{hex}: Read out antenna power
…	None	No meaning
Last byte	2nd bit string	If first and second bit strings agree, there is valid data present.

If execution is successful, the response is passed to the input buffer in the following format:

Subaddress	Meaning	Function description
00_{hex}	1st bit string	
01_{hex}	Antenna power	Antenna power for the current antenna (head) in increments of 0.25 dBm or 0 for antenna that is switched off
…	None	No meaning
Last byte	2nd bit string	If first and second bit strings agree, there is valid data present.

8 Device function

Command description (continued)

Command designator 47_{hex}: Read multiple data carriers (EPC)

Subaddress	Meaning	Function description
00_{hex}	1st bit string	
01_{hex}	Command designator	47_{hex}: Read multiple data carriers (EPC)
02_{hex}	Type	0 = EPC (other values currently not supported)
03_{hex}	Max Number of Data Carriers	Maximum number of data carriers to be output 1…255, (0 = no limitation) If the number is greater than the values listed under "“Multi-tagging” on page 13", then the lower value applies.
…	None	No meaning
Last byte	2nd bit string	If first and second bit strings agree, there is valid data present.

If execution is successful, the response is passed to the input buffer in the following format:

Subaddress	Meaning	Function description
00_{hex}	1st bit string	
01_{hex}	Number of data carriers read	1…255
02_{hex}	Number of bytes per EPC	12 or 64 This corresponds to the length of the longest transmitted EPC configured in the device. EPCs shorter than this length are output right-justified and filled with zeros on the left. In the following, the (number of data carriers read) × (number of bytes per EPC) are transmitted. For 64 bytes per EPC, the actual EPC length in ASCII is specified in the 1st and 2nd byte of the EPC.
03_{hex}	Data of 1st EPC	Actual EPC data
…	Data of 1st EPC	Actual EPC data
…	Data of 1st EPC	Actual EPC data
…	Data of 2nd EPC	Actual EPC data
…	Data of 2nd EPC	Actual EPC data
…	Data	… is continued, if necessary, in further buffer transmissions until the total number of bytes is reached.
Last byte	2nd bit string	If first and second bit strings agree, there is valid data present.

This command always responds immediately—even for configured dynamic mode—with the currently identified number of tags.

If no tag is identified, this command generates an error message (status code 01).

8 Device function

Command description (continued)

Command designator 55_{hex}: Read number of tags

Subaddress	Meaning	Function description
00_{hex}	1st bit string	
01_{hex}	Command designa-tor	55_{hex}: Read number of tags
…	None	No meaning
Last byte	2nd bit string	If first and second bit strings agree, there is valid data present.

If execution is successful, the response is passed to the input buffer in the following format:

Subaddress	Meaning	Function description
00_{hex}	1st bit string	
01_{hex}	Number of data carriers read	0…255
…	None	No meaning
Last byte	2nd bit string	If first and second bit strings agree, there is valid data present.

This command always responds immediately—even for configured dynamic mode—with the currently identified number of tags.

If no tag is identified, this command returns the number "0" and no error message.

8 Device function

Command description (continued)

Command designator 40_{hex}: Select (data carrier selection for multi-tagging)

Subaddress	Meaning	Function description
00_{hex}	1st bit string	
01_{hex}	Command designator	40_{hex}: Select tag (selection of the data carrier to be used for further processing steps such as reading or writing)
02_{hex}	Type	0 = EPC (other values currently not supported)
03_{hex}	No. of bytes	Number of bytes of the data carrier identifier (EPC) that is transmitted in following cycles.
04_{hex}	Reserved	Reserved for expansions; please set to 0.
05_{hex}	Reserved	Reserved for expansions; please set to 0.
06_{hex}	Reserved	Reserved for expansions; please set to 0.
…	None	No meaning
Last byte	2nd bit string	If first and second bit strings agree, there is valid data present.

Data of the data carrier identifier is accepted from the processor unit only after the command has been accepted by the processor unit and acknowledged.

Subaddress	Meaning	Function description
00_{hex}	1st bit string	
01_{hex}	Data	1st byte of the data carrier identifier (EPC or TID)
…	Data	Other bytes of the data carrier identifier (EPC or TID) … is continued, if necessary, in further buffer transmissions until the total number of bytes is reached.
Last byte	2nd bit string	If first and second bit strings agree, there is valid data present.

After the Select command, read/write commands (command designators 01_{hex}, 02_{hex}, 03_{hex}, 04_{hex}, 05_{hex}, 32_{hex}, 42_{hex}, 43_{hex}, 44_{hex}, 81_{hex}, 82_{hex}, $B2_{hex}$) for the corresponding antenna are run only on the designated data carrier, if it is available.

If the selected data carrier is not in the field of the antenna at the moment, the Select command is processed without errors anyway, but following read/write commands return an error with status code 01_{hex} (no data carrier).

If the selected data carrier identifier is present on more than one tag, the following commands are run as follows:
- Read commands are run on **one** data carrier, which is randomly selected from the suitable data carriers.
- Write commands are run on **all** suitable data carriers.

8 Device function

Command description (continued)

Information

– The data carrier identifier is usually taken from a preceding command 47_{hex}: *Read multiple data carriers (EPC)*. Omit the leading fill bytes in the data carrier list for this. The entire entry is usually used for the 12-byte EPC format; for the 64-byte format (as ASCII digits in byte address 0 and 1 of the respective entry), read the actual length and then read out the identifier starting from the byte address (64-length).
Example: Length specification = "24" means that the EPC is in byte address 40…63.

– If multiple data carriers are to be processed in sequence, what usually results is the following command sequence:

  Command 47_{hex}: Read multiple data carriers (EPC)

  Command 40_{hex}: Select (1st identifier)
  … Process 1st data carrier

  Command 40_{hex}: Select (2nd identifier)
  … Process 2nd data carrier

  Command 40_{hex}: Select (3rd identifier)
  … Process 3rd data carrier

  etc.

  Command 41_{hex}: Unselect

  The controller can choose the sequence of data carriers at random, omit data carriers or select the same one repeatedly.

– With the BIS U-602_ devices the selection is made only using the EPC, thereby also enabling operation of multiple antennas at one read position. Then a data carrier with a suitable data carrier identifier is also read if it is located in front of an antenna **other** than the one to which the Select command refers. If you need to ensure that only data carriers in front of the current antenna are read after a Select command, the EPC identifiers of the data carrier must be unique **and** the presence of the data carrier in front of the desired antenna must first be checked using command 47_{hex}: *Read multiple data carriers (EPC)*.

– A data carrier selection for an antenna remains valid until one of the following events occurs:
  – A new selection is defined.
  – An Unselect command undoes the selection.
  – The GR bit (basic state) for the corresponding antenna is set.
  – The device is restarted.

8 Device function

Command description (continued)

Command designator 41_{hex}: Unselect (undo the data carrier selection)

Subaddress	Meaning	Function description
00_{hex}	1st bit string	
01_{hex}	Command designator	41_{hex}: Unselect (undo the fixed data carrier selection)
…	None	No meaning
Last byte	2nd bit string	If first and second bit strings agree, there is valid data present.

The Unselect command undoes a data carrier selection for an antenna. If no selection was made, the status remains unchanged.

Subsequent read/write commands then refer to any individual data carrier in the field of the antenna. If multiple data carriers are in the field of the antenna, the following read/write commands are ended with an error and status code $0E_{hex}$ (multiple data carriers).

8 Device function

8.2 Function indicators

The operating states of the identification system and the PROFINET connection are indicated via LEDs.

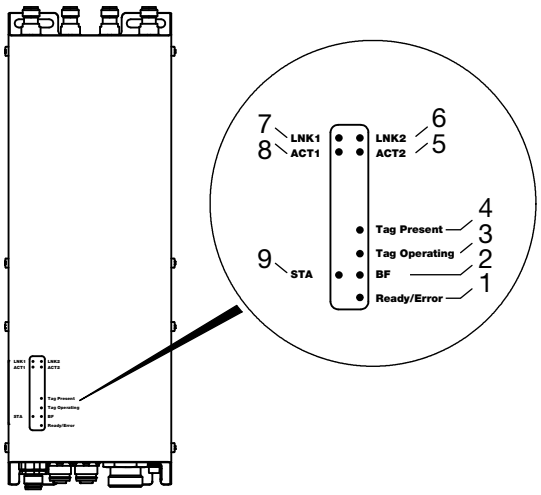

Fig. 7: Function indicators

Identification system

1	Ready/Error	**4**	Tag Present	**7**	Port 1 Link (LNK1)
2	Bus Failure (BF)	**5**	Port 2 Activity (ACT2)	**8**	Port 1 Activity (ACT1)
3	Tag Operating	**6**	Port 2 Link (LNK2)	**9**	Status (STA)

Start-up phase

The “Ready/Error” LED flashes green during the start-up phase.
When setup is finished and the system is ready for operation, the “Ready/Error” LED lights up green.

8 Device function

Diagnostics

Identification system

Status LED	Meaning
Ready / Error	
Off	Device is not ready for operation
Green, lit	Device is ready for operation
Green, flashing	Startup phase of the device (Setup)
Red, flashing	Error (e.g. device error or broken cable)

Tag operating	
Off	No command
Yellow, lit	Command to data carrier (e.g. detect, read or write)

Tag present	
Off	No command
Yellow, flashing	No data carrier detected in the active range of the antenna
Yellow, lit	Data carrier detected in the active range of the antenna

Ethernet and PROFINET connection

STA (Status)	
Off	PROFINET: not yet ready
Yellow, lit	PROFINET: ready

BF (Bus Failure)	
Off	PROFINET: connection established
Yellow, lit	PROFINET: no connection or configuration

LNK1 / LNK2 (Link)	
Off	Ethernet: no connection
Yellow, lit	Ethernet: connection OK
Yellow, flashing	DCP flashing activated

ACT1 / ACT2 (Activity)	
Off	Ethernet: no activity
Yellow, lit	Ethernet: RX- / TX-activity

8 Device function

8.3 Examples

1st example **Read 33 bytes of USER data starting at data carrier address 10**

For configuration with 16-byte buffer size!

Command from controller		BIS U-6028 reaction	
1. Process output buffer (note sequence):		2. Process input buffer: (note sequence):	
01_{hex}	Command designator 01_{hex}	$00_{hex}/0F_{hex}$	Set AA bit
02_{hex}	Start address $0A_{hex}$	$01…0E_{hex}$	Enter first 14 bytes
03_{hex}	Start address 00_{hex}	$00_{hex}/0F_{hex}$	*Set AE bit*
04_{hex}	Start address 00_{hex}		
05_{hex}	No. of bytes 21_{hex}		
06_{hex}	No. of bytes 00_{hex}		
07_{hex}	No. of bytes 00_{hex}		
$00_{hex}/0F_{hex}$	Set AV bit		
3. Process input buffer:		4. Process input buffer:	
$01…0E_{hex}$	Copy first 14 bytes	$01…0E_{hex}$	Enter second 14 bytes
Process output buffer:		$00_{hex}/0F_{hex}$	Invert TO bit
$00_{hex}/0F_{hex}$	Invert TI bit		
5. Process input buffer:		6. Process input buffer:	
$01…0E_{hex}$	Copy second 14 bytes	$01…05_{hex}$	Enter last 5 bytes
Process output buffer:		$00_{hex}/0F_{hex}$	Invert TO bit
$00_{hex}/0F_{hex}$	Invert TI bit		
7. Process input buffer:		8. Process input buffer:	
$01…05_{hex}$	Copy last 5 bytes	$00_{hex}/0F_{hex}$	Reset AA and AE bits
Process output buffer:			
$00_{hex}/0F_{hex}$	Reset AV bit		

8 Device function

2nd example **Read the EPC of the data carrier**

For configuration with buffer size of 16 bytes and EPC length of 12 bytes!

Command from controller	
1. Process output buffer (note sequence):	
01_{hex}	Command designator 03_{hex}
$00_{hex}/0F_{hex}$	Set AV bit
3. Process input buffer:	
$02…0D_{hex}$	Copy EPC
Process output buffer:	
$00_{hex}/0F_{hex}$	Reset AV bit

BIS U-6028 reaction	
2. Process input buffer: (note sequence):	
$00_{hex}/0F_{hex}$	Set AA bit
01_{hex}	Length of the received EPC
$02…0D_{hex}$	Enter EPC
$00_{hex}/0F_{hex}$	*Set AE bit*
4. Process input buffer:	
$00_{hex}/0F_{hex}$	Reset AA and AE bits

8 Device function

3rd example

Read the TID of the data carrier

For configuration with 16-byte buffer size!

If the TID length configured in the UHF manager is shorter than 12 bytes, leading zeros are used to pad the TID to 12 bytes.

Command from controller		BIS U-6028 reaction	
1. Process output buffer (note sequence):		2. Process input buffer: (note sequence):	
01_{hex}	Command designator 05_{hex}	$00_{hex}/0F_{hex}$	Set AA bit
$00_{hex}/0F_{hex}$	Set AV bit	$01…0C_{hex}$	Enter TID
		$00_{hex}/0F_{hex}$	*Set AE bit*
3. Process input buffer:		4. Process input buffer:	
$01…0C_{hex}$	Copy TID	$01…0F_{hex}$	Reset AA and AE bits
Process output buffer:			
$00_{hex}/0F_{hex}$	Reset AV bit		

8 Device function

4th example **Read 30 bytes of USER data starting at data carrier address 10 with read error**

For configuration with 16-byte buffer size!

> **Information**
> If an error occurs, the AF bit is set instead of the AE bit, together with a corresponding error number. Setting the AF bit cancels the job and declares it as finished.

Command from controller		BIS U-6028 reaction	

1. Process output buffer (note sequence):

01_{hex}	Command designator 01_{hex}
02_{hex}	Start address $0A_{hex}$
03_{hex}	Start address 00_{hex}
04_{hex}	Start address 00_{hex}
05_{hex}	No. of bytes $1E_{hex}$
06_{hex}	No. of bytes 00_{hex}
07_{hex}	No. of bytes 00_{hex}
$00_{hex}/0F_{hex}$	Set AV bit

2. Process input buffer: (note sequence): **If an error occurs immediately!**

$00_{hex}/0F_{hex}$	Set AA bit
01_{hex}	Enter error number
$00_{hex}/0F_{hex}$	*Set AF bit*

3. Process input buffer:

01_{hex}	Copy error number

Process output buffer:

$00_{hex}/0F_{hex}$	Invert AV bit

4. Process input buffer:

$00_{hex}/0F_{hex}$	Reset AA and AF bits

8 Device function

5th example **Write 32 bytes of USER data starting at data carrier address 20**

For configuration with 16-byte buffer size!

Command from controller		BIS U-6028 reaction	

1. Process output buffer (note sequence):

01_{hex}	Command designator 02_{hex}
02_{hex}	Start address 14_{hex}
03_{hex}	Start address 00_{hex}
04_{hex}	Start address 00_{hex}
05_{hex}	No. of bytes 20_{hex}
06_{hex}	No. of bytes 00_{hex}
07_{hex}	No. of bytes 00_{hex}
$00_{hex}/0F_{hex}$	Set AV bit

2. Process input buffer: (note sequence):

$00_{hex}/0F_{hex}$	Set AA bit Invert TO bit

3. Process output buffer:

$01…0E_{hex}$	Enter first 14 bytes
$00_{hex}/0F_{hex}$	Invert TI bit

4. Process output buffer:

$01…0E_{hex}$	Copy first 14 bytes

Process input buffer:

$00_{hex}/0F_{hex}$	Invert TO bit

5. Process output buffer:

$01…0E_{hex}$	Enter second 14 bytes
$00_{hex}/0F_{hex}$	Invert TI bit

6. Process output buffer:

$01…0E_{hex}$	Copy second 14 bytes

Process input buffer:

$00_{hex}/0F_{hex}$	Invert TO bit

7. Process output buffer:

$01…04_{hex}$	Enter last 4 bytes
$00_{hex}/0F_{hex}$	Invert TI bit

8. Process output buffer:

$01…04_{hex}$	Copy last 4 bytes

Process input buffer:

$00_{hex}/0F_{hex}$	Set AE bit

9. Process output buffer:

$00_{hex}/0F_{hex}$	Reset AV bit

10. Process input buffer:

$00_{hex}/0F_{hex}$	Reset AA and AE bits

8 Device function

6th example **Write 12 bytes of EPC on the data carrier**

For configuration with 16-byte buffer size!

Command from controller		BIS U-6028 reaction	
1. Process output buffer (note sequence):		2. Process input buffer: (note sequence):	
01_{hex}	Command designator 02_{hex}	$00_{hex}/0F_{hex}$	Set AA bit Invert TO bit
02_{hex}	EPC length		
$00_{hex}/0F_{hex}$	Set AV bit		
7. Process output buffer:		8. Process output buffer:	
$01…0C_{hex}$	Enter EPC	$01…0C_{hex}$	Copy EPC
$00_{hex}/0F_{hex}$	Invert TI bit	Process input buffer:	
		$00_{hex}/0F_{hex}$	Set AE bit
9. Process output buffer:		10. Process input buffer:	
$00_{hex}/0F_{hex}$	Reset AV bit	$00_{hex}/0F_{hex}$	Reset AA and AE bits

8 Device function

7th example **Establish base state of antenna 1**

For configuration with 16-byte buffer size!

The antennas of the BIS U identification system can be set to the base state independent of one another.

Control		Identification system	
1. Process output buffer (note sequence):		2. Go to base state. Process input buffer:	
$00_{hex}/0F_{hex}$	Set GR bit	$00_{hex}/0F_{hex}$	Reset BB bit
3. Process output buffer:		4. Process input buffer:	
$00_{hex}/0F_{hex}$	Reset GR bit	$00_{hex}/0F_{hex}$	Set BB bit

8th example **Switch off antennas**

For configuration with 16-byte buffer size!

In normal operation, both antennas are switched on. By setting the KA bit, the antenna selected by the HD bit can be switched off (antenna 1 or 3 for buffer 1, antenna 2 or 4 for buffer 2).

Control	
1. Process output buffer:	
$00_{hex}/0F_{hex}$	Set KA bit

The antennas are switched back on by resetting the KA bit.

8 Device function

9th example **Read the EPCs of multiple data carriers in front of the antenna**

For configuration with 16-byte buffer size!

With a maximum number of 5, EPC size of 12 bytes configured, 3 data carriers identified

Command from controller		BIS U-6028 reaction	
1. Process output buffer (note sequence):		2. Process input buffer (note sequence):	
01_{hex}	Command designator 47_{hex}	$00_{hex}/0F_{hex}$	Set AA bit
02_{hex}	Type EPC 00_{hex}	01_{hex}	Number of data carriers 03_{hex}
03_{hex}	Max. number 05_{hex}	02_{hex}	Number of bytes per EPC $0C_{hex}$
$00_{hex}/0F_{hex}$	Set AV bit	$03_{hex}\ldots0E_{hex}$	First EPC 12 bytes
		$00_{hex}/0F_{hex}$	Set AE bit
3a. Process input buffer:		4. Process input buffer:	
01_{hex}	Note number of data carriers	$01\ldots0C_{hex}$	Enter second EPC 12 bytes
02_{hex}	Save number of bytes	$0D_{hex}/0E_{hex}$	Enter third EPC 2 bytes
$03_{hex}/0E_{hex}$	Copy first EPC 12 bytes	$00_{hex}/0F_{hex}$	Invert TO bit
3b. Process output buffer:			
$00_{hex}/0F_{hex}$	Invert TI bit		
5a. Process input buffer:		6. Process input buffer:	
$01_{hex}\ldots0C_{hex}$	Copy second EPC 12 bytes	$01_{hex}\ldots0A_{hex}$	Enter third EPC 10 bytes
$0D_{hex}/0E_{hex}$	Copy third EPC 2 bytes	$00_{hex}/0F_{hex}$	Invert TO bit
5b. Process output buffer:			
$00_{hex}/0F_{hex}$	Invert TI bit		
7a. Process input buffer:		8. Process input buffer:	
$01_{hex}/0A_{hex}$	Copy third EPC 10 bytes	$00_{hex}/0F_{hex}$	Reset AA and AE bits
7b. Process output buffer:			
$00_{hex}/0F_{hex}$	Reset AV bit		

8 Device function

10th example **Select a data carrier for further processing**

For configuration with 16-byte buffer size!

For configuration with EPC size of 12 bytes

Command from controller		BIS U-6028 reaction	

1. Process output buffer (note sequence):

01_{hex}	Command designator 40_{hex}
02_{hex}	Type EPC 00_{hex}
03_{hex}	Length of the EPC $0C_{hex}$
04_{hex}	Reserved 00_{hex}
05_{hex}	Reserved 00_{hex}
06_{hex}	Reserved 00_{hex}
$00_{hex}/0F_{hex}$	Set AV bit

2. Process input buffer (note sequence):

$00_{hex}/0F_{hex}$	Set AA bit Invert TO bit

3. Process output buffer:

$01_{hex}…0C_{hex}$	Enter 12 bytes EPC
$00_{hex}/0F_{hex}$	Invert TI bit

4a. Process output buffer:

$01_{hex}…0C_{hex}$	Save EPC

4b. Process input buffer:

$00_{hex}/0F_{hex}$	Set AE bit

5. Process output buffer:

$00_{hex}/0F_{hex}$	Reset AV bit

6. Process input buffer:

$00_{hex}/0F_{hex}$	Reset AA and AE bits

Appendix

Type code

BIS U– 6028 –048–104–06–ST28

Balluff identification system

Series U read/write system

Hardware type

6020 = Serial interface RS232 (metal housing)
6026 = EtherNet/IP (metal housing)
6027 = Ethernet TCP/IP (metal housing)
6028 = PROFINET (metal housing)

Software type

034 = Balluff protocol EtherNet/IP
048 = Balluff protocol PROFINET
053 = Balluff protocol RS232 UHF for Europe
054 = Balluff protocol Ethernet TCP/IP UHF for Europe
059 = Balluff protocol RS232 UHF for USA/Canada/Mexico/Brazil/China/Japan etc.
060 = Balluff protocol Ethernet TCP/IP UHF for USA/Canada/Mexico/Brazil/China/Japan etc.

Antenna socket version

10_ = Country setting 865…868 MHz Europe
11_ = Country setting 902…928 MHz USA/Canada/Mexico/Argentina
12_ = Country setting 920.5…924.5 MHz China
13_ = Country setting 915…928 MHz Brazil
15_ = Country setting 916.8…920.4 MHz Japan
17_ = Country setting 920…926 MHz Australia
__4 = 4 antenna sockets

Interface

00 = RS232
06 = Ethernet

Customer connection

ST22 = for PROFINET device with AIDA recommendation
ST26 = for serial device
ST27 = for TCP/IP device
ST28 = for PROFINET device
ST35 = for EtherNet/IP device

Accessories (optional, not included in scope of delivery)

Type	Order designation
Mounting plates	BIS Z-HW-004

Note
You can find more accessories for the BIS U-6028-... in the Balluff BIS catalog and under www.balluff.com.

Appendix

ASCII table

Decimal	Hex	Control code	ASCII	Decimal	Hex	ASCII	Decimal	Hex	ASCII
0	00	Ctrl @	NUL	43	2B	+	86	56	V
1	01	Ctrl A	SOH	44	2C	,	87	57	W
2	02	Ctrl B	STX	45	2D	-	88	58	X
3	03	Ctrl C	ETX	46	2E	.	89	59	Y
4	04	Ctrl D	EOT	47	2F	/	90	5 A	Z
5	05	Ctrl E	ENQ	48	30	0	91	5B	[
6	06	Ctrl F	ACK	49	31	1	92	5C	\
7	07	Ctrl G	BEL	50	32	2	93	5D	[
8	08	Ctrl H	BS	51	33	3	94	5E	^
9	09	Ctrl I	HT	52	34	4	95	5F	_
10	0 A	Ctrl J	LF	53	35	5	96	60	`
11	0B	Ctrl K	VT	54	36	6	97	61	A
12	0C	Ctrl L	FF	55	37	7	98	62	B
13	0D	Ctrl M	CR	56	38	8	99	63	c
14	0E	Ctrl N	SO	57	39	9	100	64	d
15	0F	Ctrl O	SI	58	3 A	:	101	65	e
16	10	Ctrl P	DLE	59	3B	;	102	66	f
17	11	Ctrl Q	DC1	60	3C	<	103	67	g
18	12	Ctrl R	DC2	61	3D	=	104	68	h
19	13	Ctrl S	DC3	62	3E	>	105	69	i
20	14	Ctrl T	DC4	63	3F	?	106	6 A	j
21	15	Ctrl U	NAK	64	40	@	107	6B	k
22	16	Ctrl V	SYN	65	41	A	108	6C	L
23	17	Ctrl W	ETB	66	42	B	109	6D	m
24	18	Ctrl X	CAN	67	43	C	110	6E	n
25	19	Ctrl Y	EM	68	44	D	111	6F	o
26	1 A	Ctrl Z	SUB	69	45	E	112	70	p
27	1B	Ctrl [	ESC	70	46	F	113	71	q
28	1C	Ctrl \	FS	71	47	G	114	72	r
29	1D	Ctrl]	GS	72	48	H	115	73	s
30	1E	Ctrl ^	RS	73	49	I	116	74	t
31	1F	Ctrl _	US	74	4 A	J	117	75	u
32	20		SP	75	4B	K	118	76	V
33	21		!	76	4C	L	119	77	W
34	22		"	77	4D	M	120	78	X
35	23		#	78	4E	N	121	79	Y
36	24		$	79	4F	O	122	7 A	Z
37	25		%	80	50	P	123	7B	{
38	26		&	81	51	Q	124	7C	|
39	27		'	82	52	R	125	7D	}
40	28		(	83	53	S	126	7E	~
41	29		)	84	54	T	127	7F	DEL
42	2 A		*	85	55	U			

Index

www.balluff.com

Balluff GmbH
Schurwaldstraße 9
73765 Neuhausen a.d.F.
Germany
Tel. +49 7158 173-0
Fax +49 7158 5010
balluff@balluff.de
www.balluff.com

No 895354-726 DE · 04.123112 . K16; Änderungen vorbehalten. Ersetzt E15.