BALLUFF

BIC 1B0-ITA50-Q40KFU-SM4A4A
BIC 1B0-IT005-Q40KFU-SM4A4A
BIC 2B0-ITA50-Q40KFU-SM4A5A

User´s Guide

Table of contents

1 Safety

1.1. Installation and startup

Attention!
Installation and startup are to be performed only by trained specialists. Qualified personnel are persons who are familiar with the installation and operation of the product, and who fulfills the qualifications required for this activity. Any damage resulting from unauthorized manipulation or improper use voids the manufacturer's guarantee and warranty. The Operator is responsible for ensuring that applicable of safety and accident prevention regulations are complied with.

1.2. General safety instructions

Commissioning and inspection
The operating company shall be responsible for observance of locally applicable safety instructions.
Before commissioning, carefully read the operating manual.
The system must not be used in applications in which the safety of persons is dependent on the function of the device.
Authorized Personnel
Installation and commissioning may only be performed by trained specialist personnel.
Intended use
Warranty and liability claims against the manufacturer are rendered void by:

- Unauthorized tampering
- Improper use
- Use, installation or handling contrary to the instructions provided in this operating manual

Obligations of the Operating Company
The device is a piece of equipment from EMC Class A. Such equipment may generate RF noise. The operator must take appropriate precautionary measures. The device may only be used with an approved power supply. Only approved cables may be used.
Malfunctions
In the event of defects and device malfunctions that cannot be rectified, the device must be taken out of operation and protected against unauthorized use.

Hazardous voltage

Attention!
Disconnect all power before servicing equipment.

Intended use

Attention!
Inductive coupling systems (BIC) are devices for contactless energy and signal transmission in industrial environments.

Prohibited is the use:

- in environment with explosive atmosphere.
- in application where the safety of persons or machines depends on the transmitted signals. (Safety circuits)

1.3. Safety instructions

Caution!
Risk of burning on hot surfaces! The sensing surface heats up under normal operating conditions.
Keep hands and objects away from the active surface.
Metallic objects should not reach the area between the sensing surfaces of the base and remote units.
Fire hazard!

1.4. Differing views

Product views and images in this manual may differ from the product described. They are intended to serve only as illustrations.

Protection from electromagnetic fields

Protection from electromagnetic fields during operation and assembly
At the distance of 300mm, the magnetic field intensity of the BIC is less than 0,092 µT. This distance has ascertained based on the reference values of the EU council recommendation 1999/519/EC (EN 62311:2008) and has to be ensuring as value for safety of human exposure to electromagnetic fields.
It's possible that for people with active medical implants exist additional limits which can be operational limits.

Note
In the interest of product improvement, the Balluff GmbH reserves the right to change the specifications of the product and the contents of this manual at any time without notice.

2 System overview

System overview

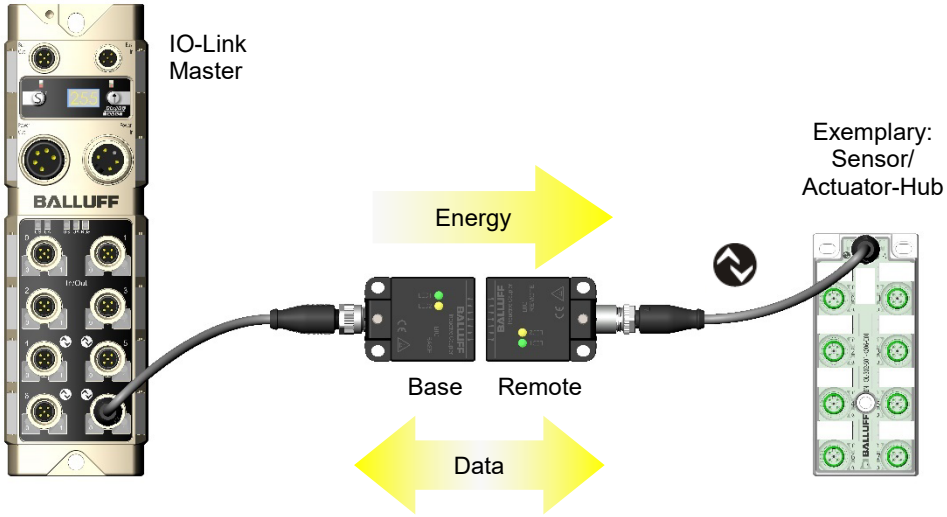

System description:
The BIC system consists of two components. It transmits electrical power from the stationary components (base) to the mobile components (remote) via the air gap. The transmission distance of base and remote amounts to 0 to 5 mm. In addition, the BIC system transmits the IO-Link port data (see previous picture) from the IO-Link master to the BIC system component remote. In this way, the IO-Link functionality of the IO-Link port on the master is made available without contact on the remote.

The BIC system can only be operated using Balluff IO-Link masters.
The reliable operation with IO-Link Master from other manufacturers cannot be guaranteed.

If the BIC is connected to a Profibus-IO-Link-Master Module from Balluff, only modules from the following hardware version are allowed.

PBS Master	Hardware Version
BNI PBS-502-101-Z001	HW07
BNI PBS-504-002-K008	HW03
BNI PBS-507-002-Z011	HW06

3 Installation

3.1. Mutual Interference

To prevent mutual interference with adjacent bases or remotes, the specified minimum distances must be adhered to:

Typ	A (mm)
BIC 1B0-ITA50-Q40KFU-SM4A4A	≥ 70
BIC 2B0-ITA50-Q40KFU-SM4A5A	≥ 70

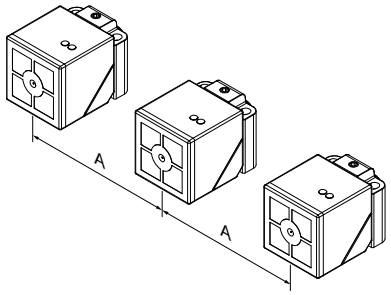

3.2. Installation in metal

Device damage due to induction effects!
Metallic objects on and in front of the coil cap will be heated. The active area is characterized by the cross-hairs on the body (See figure chapter 3.1)
The components are installed so that they are no metal objects in, the resultant of the intervals A and B zone. The distances A and B are independent of each other observed!

Typ	A (mm)	B (mm)
BIC 1B0-ITA50-Q40KFU-SM4A4A	≥ 30	≥ 20
BIC 2B0-ITA50-Q40KFU-SM4A5A	≥ 30	≥ 20

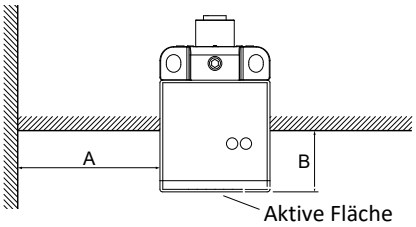

3 Installation

3.3. Distances / offset

Permitted distances / offset of the axes

Type	A (mm)	B (mm)
BIC 1B0-ITA50-Q40KFU-SM4A4A	≤ 5	≤ 5
BIC 2B0-ITA50-Q40KFU-SM4A5A	≤ 5	≤ 5

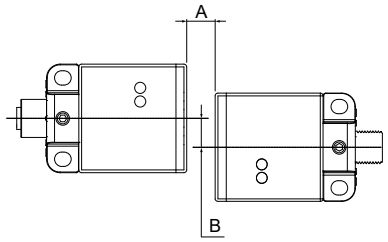

3.4. Admissible angular offset

Abstand D (mm)	Winkel x (°)
1	11°
2	8°
3	6°
4	3°
5	0°

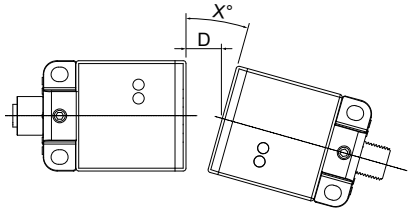

3.5. 180° rotation of the connector insert

The connector insert on the base and remote can be rotated 180°.
Follow the disassembly steps described below (steps 1 to 6). After the connector insert is rotated (step 7), subsequent reassembly is performed in reverse order.

Removing the holder

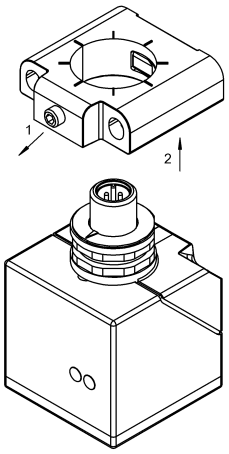

1. Loosen the grub screw
2. Pull off the BIC holder

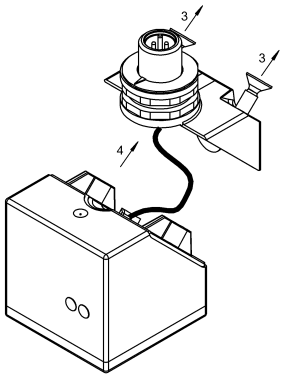

3. Loosen the two countersunk screws
4. Remove the BIC base

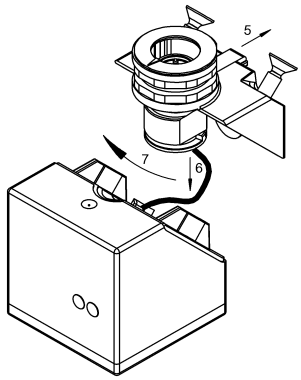

5. Pull out the safety pin
6. Slide out the connector insert
7. 180° rotation of the connector insert

Note
The disassembly/assembly for rotating the connector can be carried out only 2 times. (construction conditioned)

4 Energy Transfer

The maximum power that can be transmitted with the BIC system depends on distance, lateral axis offset and angular offset (see Section 3.3 and 3.4).
At a distance of 5 mm, a lateral offset of 5 mm and no angular offset, the output current of 500 mA to the remote, which is specified in the electrical data under Section 6.2, is guaranteed.

4.1. Derating

Explanations for increasing the maximum transmittable power as well as increasing the maximum transmission distance.

Due to the reduction of distance, axis-offset and angular-offset (cf. paragraph 3.3 and 3.4), it is possible to increase the maximum transferable power. Similarly, the transmission distance of the BIC system can be increased in case of lower energy demand. In case of overload, the output voltage on the Remote side will break down without sending an event message!
Following diagram depicts the typical curve of the derating-curve.

Derating curve: output power of the remote at 24V-5%

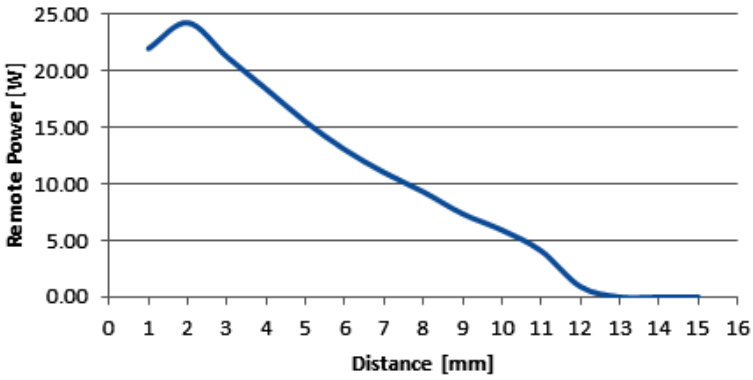

Note

The measurement on which the derating curve is based was carried out without axis and angular offset. The value ranges of the derating curve are to be interpreted as typical values.

4.2. Reduction of the power emitted at the base when the remote is disconnected

To protect people and the environment, the base component automatically reduces power, which is emitted in the form of electromagnetic fields, as soon as the remote component is disconnected.

Technical utility

The technical utility is in particular the prevention of heating metallic objects that end up in front of the base when the remote is disconnected. In addition, the power reduction allows metals to remain in front of the active surface for long periods of time without causing damage to the base.

Power reduction variants

The base component with the order number **BIC0070 (**BIC 1B0-ITA50-Q40KFU-SM4A4A) reduces power while simultaneously optimizing for faster start-up. Metal objects are heated up easily.

The base component with the order number **BIC0072** (BIC 1B0-IT005-Q40KFU-SM4A4A) reduces power with optimization for minimum heating of metals. This adversely affects the start-up time

Note

The start-up times of both base variants are described under Section 5.2.

5 IO-Link communication

5.1. Transmission properties

BIC 1BO-ITA50-Q40KFU-SM4A4A, BIC 1B0-IT005-Q40KFU-SM4A4A, BIC 2BO-ITA50-Q40KFU-SM4A5A	
Transfer rate	COM2 (38.4 Kbaud)
Min cycle time	Device + 2 ms
Process data cycle	Device + 2 ms
SIO mode	No
Type of master port	A
Process data in	0…32 bytes
Process data out	0…32 bytes

IO-Link communication

The BIC system transmits the IO-Link protocol across the air gap to the base and remote units and transmits all IO-Link input and output data, regardless of the length of the process data. The IO-Link protocol is transmitted without any restrictions so the BIC system parameters do not need adjusting. The device connected to the BIC system has to be integrated in the control.
An IODD is therefore not required for the bidirectional BIC Q40.

Note
The BIC system can only be operated using Balluff IO-Link masters. Using IO-Link masters produced by other manufacturers can lead to disruptions in communication.

Transparent PIN2

Pin 2 on base and remote is transparent and transmits the signal status "High Active" from the IO-Link port on the master to the IO-Link device.

5.2. Connection time

The time needed to establish the connection of base and remote is affected by many different variables. Start-up speed and angle play just as much of a role as the IO-Link device connected to the remote and the IO-Link parameters set within it. The type of IO-Link master used and its parameter settings also affect the connection time. These variables are all application-specific and therefore cannot be generalized.

The measurements carried out by Balluff to determine the connection time were done using a Balluff EtherNet-IP master in combination with the Balluff IO-Link device "BNI IOL-302-00-Z012". The distance from base to remote was 5 mm without axis and angular offset. In total, 100,000 connection cycles comprising a variety of directions and speeds were evaluated.

The power reduction function (see Section 4.2) substantially influences the connection time to an extent that depends on the particular system. Therefore, a separate connection time is specified for every base variant:

Base variant (Order-Code)	Typical connection time in seconds
BIC0070	0,9
BIC0072	1,2

Note
The typical connection times specified here correspond to the arithmetic mean of 100,000 connection times.

6 Technical data

6.1. Base

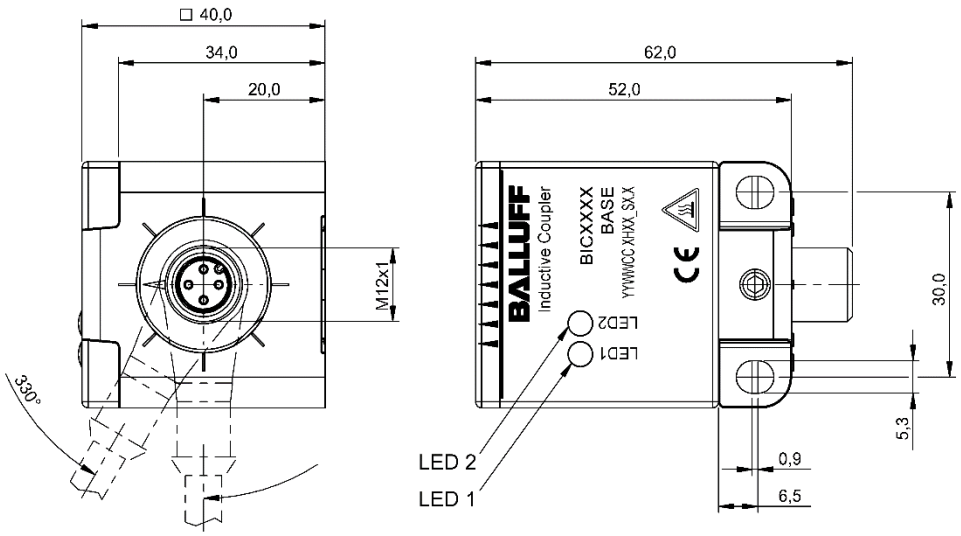

LED 1 / LED 2

LED	Display	Function
LED 1	Green static	Supply voltage OK
	Green inverted flashing	IO-Link connection OK
LED 2	Yellow flashing	No Remote found
	Yellow static	Remote found
	Red flashing	Undervoltage

Mechanical data

Housing material	Black plastic, PBTP
Housing degree of protection	IP 67 (only in plugged-in and screwed-down state)
Dimensions (W x H x D in mm)	62 x 40 x 40
Weight	150 g

Operating conditions

Operating temperature T_a Storage temperature range	–5 °C ... 65 °C -25 C ... 70 °C

6 Technical data

Electrical data

Supply voltage	24 V DC ±10%, by EN 61131-2
Current consumption	< 1,4 A
Standby current	≤ 200 mA
Overload protection	Yes
Ripple	< 1%

Pin Assignment

Power (M12, 4-pin socket)		
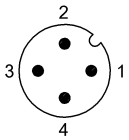	**PIN**	**Signal**
	1	+24 V
	2	Transparent input
	3	GND, 0V
	4	C/Q, IO-Link

6 Technical data

6.2. Remote

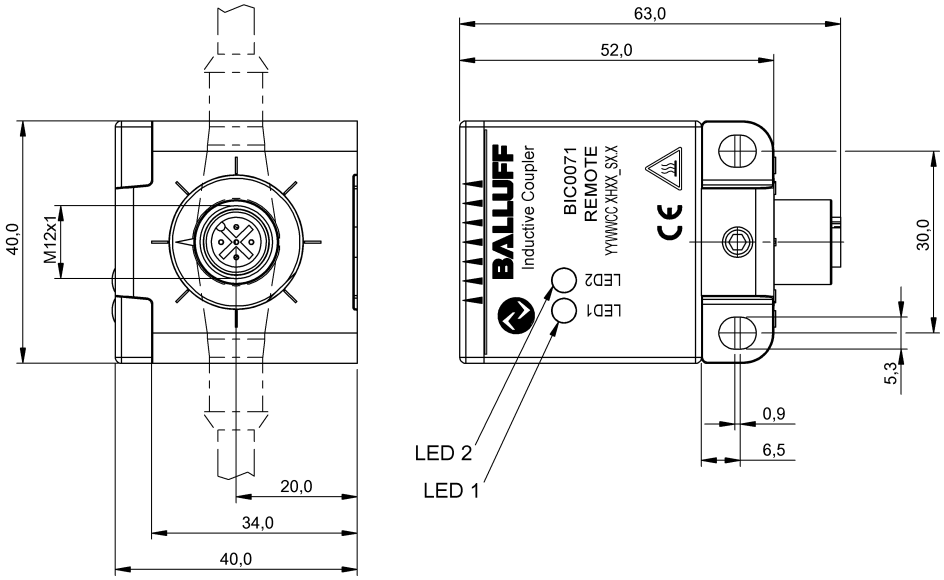

LED 1 / LED 2

LED	Display	Function
LED 1	Green static	Supply voltage OK
	Green inverted flashing	IO-Link connection OK
LED 2	Yellow on	Pin 2 high
	Yellow off	Pin 2 low

Mechanical data

Housing material	Black plastic, PBTP
Housing degree of protection	IP 67 (only in plugged-in and screwed-down state)
Dimensions (W x H x D in mm)	63 x 40 x 40
Weight	150 g

Electrical data

Output voltage at ≤ 5 mm distance	24 V DC ±5%
Output current	500 mA
Short circuit	Yes

Operating conditions

Operating temperature T_a Storage temperature range	–5°C ... 65°C -25°C ... 70°C

6 Technical data

Pin Assignment

Power (M12, 5-pin connector)		
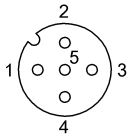	**PIN**	**Signal**
	1	+24 V
	2	Transparent output
	3	GND, 0V
	4	C/Q, IO-Link
	5	NC

7 Order information

Ordering information

Product ordering code	Ordering code
BIC 1B0-ITA50-Q40KFU-SM4A4A	BIC0070
BIC 1B0-IT005-Q40KFU-SM4A4A	BIC0072
BIC 2B0-ITA50-Q40KFU-SM4A5A	BIC0071

www.balluff.com

Balluff GmbH
Schurwaldstrasse 9
73765 Neuhausen a.d.F.
Deutschland
Tel. +49 7158 173-0
Fax +49 7158 5010
balluff@balluff.de

No. 898544 E -726 • 06.127436 • Edition K18 • Replaces Edition K14 • Subject to modification

BALLUFF